RHODE ISLAND DEPARTMENT OF ENVIRONMENTAL MANAGEMENT
OFFICE OF WATER RESOURCES

Final Changes to the RI Stormwater Design and Installation Standards Manual

December 3, 2010

This document shows the changes made to the RI Stormwater Design and Installation Standards Manual from the public notice version (August 17, 2010) to the final version filed with the Secretary of State. Inserted text is underlined; deletions are marked with strikethrough.

Note: format, punctuation and spelling changes that do not affect the intent of the content are **not** included herein.

Section 1.1

~~[1] In an effort to maintain pre-development rates in natural waterways, specific~~[1] Specific exemptions are available for peak flow attenuation criteria in certain situations, as described in Chapter Three of the manual.

Section 3.1

Table 3-1 Design Rainfall Amounts for Rhode Island

RI ~~Region~~County	24-hour (Type III) Rainfall Amount (inches~~)~~)*						
	1-Year~~*~~	2-Year	5-Year	10-Year	25-Year	50-Year	100-Year
~~Northern:~~ Providence County	~~3.1~~2.7	3.~~4~~3	4.~~2~~1	~~5.0~~4.9	6.~~2~~1	7.~~5~~3	8.~~9~~7
~~Eastern: Newport &~~ Bristol Count~~ies~~y	~~3.~~2.8	3.~~4~~3	4.~~3~~1	~~5.1~~4.9	6.~~3~~1	7.~~6~~3	~~9.1~~8.6
Newport County	2.8	3.3	4.1	4.9	6.1	7.3	8.6
~~Southern:~~ Kent ~~& Washington Counties~~County	~~3.~~2.7	3.~~5~~3	4.~~4~~1	~~5.2~~4.8	6.~~4~~2	7.~~7~~3	~~9.3~~8.7
Washington County	2.8	3.3	4.1	4.9	6.1	7.2	8.5

*All Rhode Island County rainfall values ~~(except the 1-year)~~ were ~~adapted from: Atlas of Precipitation Extremes for the Northeastern United States and Southeastern Canada and data~~obtained from the Northeast Regional Climate Center (NRCC) ~~for the following stations: Providence TF Green Airport,~~

~~Woonsocket, and Kingston for station~~ using regional rainfall data processed by NRCC from the period of record through ~~October~~December 2008.
~~*~~ The NRCC ~~and NRCS Beta website (http://precip.eas.cornell.edu/) "Extreme Precipitation~~ in ~~New York & New England: An Interactive Web Tool for Extreme Precipitation Analysis" was used~~collaboration with the Natural Resource Conservation Service has under development an interactive web tool at www.precip.net for analysis of precipitation events based on long-term, station-specific data. Applicants may elect to ~~determine~~use site-specific data derived from this web tool once the beta site becomes final rather than the ~~1-year rainfall data. Site was accessed~~RI County values in ~~March 2010~~Table 3-1.

Section 3.2.4

Minimum Standard 4: Conveyance and Natural Channel Protection

Open drainage and pipe conveyance systems must be designed to provide adequate passage for flows leading to, from, and through stormwater management facilities for at least the peak flow from the 10-year, 24-hour Type III design storm event. Protection for natural channels downstream must be supplied by providing 24-hour extended detention of the one-year, 24-hour Type III design storm event runoff volume. If a stormwater discharge is proposed in a watershed draining to a cold-water fishery, additional restrictions apply for surface detention practices based on the distance from the discharge point to streams (and any contiguous natural or vegetated wetlands) as described in Section 3.3.4. Consult DEM's Water Quality Regulations~~, Fish and Wildlife Division~~ – Appendix A to determine if a project is in a watershed directly draining to a cold-water fishery. This standard is designed to prevent erosive flow within natural channels and drainageways. For hydrologic and hydraulic modeling guidance, applicants should refer to Appendix K.

Section 3.2.6

Redevelopment

Redevelopment is defined as any construction, alteration, or improvement that disturbs a total of 10,000 square feet or more of existing impervious area where the existing land use is commercial, industrial, institutional, governmental, recreational, or multifamily residential. The permitting authority may take into consideration prior projects or multi-phase projects in determining if the redevelopment threshold has been met. Building demolition is included as an activity defined as "redevelopment," but building renovation is not. Similarly, removal of roadway materials down to the erodible soil surface is an activity defined as "redevelopment," but simply resurfacing of a roadway surface is not. Pavement excavation and patching that is incidental to the primary project purpose, such as replacement of a collapsed storm drain, is not classified as redevelopment. In general, the requirements in this manual do not apply to projects or portions of projects when the total existing impervious area disturbed is less than 10,000 square feet. However, specific regulatory programs may impose additional requirements. Any creation of new impervious area over portions of the site that are currently pervious is required to comply fully with the requirements of this manual.

….

For redevelopment sites with 40% or more existing impervious surface coverage, only Standards 2, 3, and 7-11 must be addressed. Specifically, recharge and stormwater quality ~~and recharge~~[1] shall be managed for in accordance with one or more of the following techniques:

- Reduce existing impervious area by at least 50% of the redevelopment area; or
- Implement other LID techniques to the maximum extent practicable to provide recharge and water quality ~~and recharge~~ management for at least 50% of the redevelopment area; or
- Use on-site structural BMPs to provide recharge and water quality ~~and recharge~~ management for at least 50% of redevelopment area; or
- Any combination of impervious area reduction, other LID techniques, or on-site structural BMPs for at least 50% of redevelopment area.
- If none of the above options are practical in terms of water quality management, alternatives may be proposed that would achieve an equivalent pollutant reduction by using a combination of other types of BMPs and strategies, including treating 100% of the redevelopment area by BMPs with a lesser pollutant removal efficiency than stipulated in Standard 3.

Off-site structural BMPs to provide recharge and water quality ~~and recharge~~ management for an area equal to or greater than 50% of redevelopment areas may be used to meet these requirements provided that the applicant satisfactorily demonstrates that impervious area reduction, LID strategies, and/or on-site structural BMPs have been implemented to the maximum extent practicable. An approved off-site location must be identified, the specific management measures identified, and an implementation schedule developed in accordance with local review and with DEM/CRMC concurrence, as appropriate. The applicant must also demonstrate that there are no downstream drainage or flooding impacts as a result of not providing on-site management for large storm events.

Infill

For infill[2] sites, the stormwater management requirements will be the same as for new development except that existing impervious area may be excluded from the stormwater management plan (unless subject to local approval or necessary for mitigation by regulation) and only Standards 2, 3, and ~~3~~7-11 need be applied. The applicant, however, can meet ~~those~~the recharge and water quality requirements either on-site or

[1] For redevelopment sites with 40% or more existing impervious surface coverage, only Standards 2, 3, and ~~3~~7-11 must be addressed. However, the permitting agency may require peak flow control on a case-by-case basis within a watershed with a history of flooding problems.

[2] An infill project is a development site that meets all of the following: the site is currently predominately pervious (less than 10,000 sf of existing impervious cover); it is surrounded (on at least three sides) by existing development (not including roadways); the site is served by a network of existing infrastructure and does not require the extension of utility lines or new public road construction to serve the property; and the site is one (1) acre or less where the existing land use is commercial, industrial, institutional, governmental, recreational, or multifamily residential.

at an approved off-site location within the same watershed, provided the applicant satisfactorily demonstrates that impervious area reduction, LID strategies, and/or structural BMPs have been implemented on-site to the maximum extent practicable. An approved off-site location must be identified, the specific management measures identified, and an implementation schedule developed in accordance with local review and with DEM/CRMC concurrence, as appropriate. The applicant must also demonstrate that there are no downstream drainage or flooding impacts as a result of not providing on-site management. The intent of this provision is to allow flexibility to meet the goals of improved recharge, water quality, and channel and flood protection to receiving waters while still promoting infill in urban and urban fringe areas.

Section 3.2.8

Minimum Standard 8: Land Uses with Higher Potential Pollutant Loads

Stormwater discharges from land uses with higher potential pollutant loads (LUHPPLs) require the use of specific source control and pollution prevention measures and the specific stormwater BMPs approved for such use. Allowable BMPs for LUHPPLs are included in Table 3-3 (design details for these practices are provided in Chapter Five). Many LUHPPLs require additional special permits such as a Rhode Island Pollutant Discharge Elimination System (RIPDES) Multi-Sector General Permit (MSGP), and sector-specific required BMPs are included in Section VI of the MSGP. Stormwater runoff from a LUHPPL (classified in Table 3-2) shall not be recharged to groundwater, unless it has been adequately treated for the pollutant of concern as determined by the approving agency. The recharge prohibition at LUHPPLs applies only to stormwater discharges that come into contact with the area or activity on the site that may generate the higher potential pollutant load. In addition, infiltration practices sh~~a~~oul~~l~~d not be used where subsurface contamination is present from prior land use due to the increased threat of pollutant migration associated with increased hydraulic loading from infiltration systems, unless the contamination is removed and the site has been remediated~~.~~, or if approved by DEM on a case-by-case basis. In these areas where infiltration is not appropriate, other LID practices can be used, as long as they are lined (e.g., lined bioretention areas). The intent of this standard is to prevent, to the maximum extent practicable, pollution from entering water resources.

Section 4.6.1.1 Minimum Criteria for Stormwater Credit

The LID Stormwater Credit is subject to the following restrictions:

- The flow path through the QPA sh~~a~~oul~~l~~d comply with the setbacks established for structural infiltration BMPs. See Table 5-2.

Section 5.2 Wet Vegetated Treatment Systems

KEY CONSIDERATIONS

FEASIBILITY

- Additional restrictions apply in cold-water fishery watershed based on distance from discharge point to streams (and any contiguous wetlands).

PRETREATMENT

- Sediment forebay at inlet, capturing 10% of the WQ_v

TREATMENT

For a Shallow WVTS:

- Surface area must be minimum of 1.5% of drainage area.
- ~~25% of the WQ_v in deepwater zones,~~ 35% of the total surface area in depths ~~six~~6 inches or less, and 65% of the total surface area shallower than 18 inches.
- At least 10% of the WQ_v shall be provided in a sediment forebay or other pretreatment practice, and 25% of the WQ_v in deepwater zones. The remaining 65% of the WQ_v shall be provided in some combination of shallow permanent pool and ED. ED storage volume shall not exceed 50% of the WQ_v and shall drain over 24 hours.

For a Gravel WVTS:

- Surface area must be minimum of 0.35% of drainage area.
- At least 10% of the WQ_v shall be provided in a sediment forebay or other pretreatment practice. The remaining 90% of the WQ_v may be provided in some combination of one or more basins ~~or chambers~~ filled with gravel~~. The portion~~ and ED storage above the gravel. ED storage volume shall not exceed 50% of the WQ_v ~~provided above the permanent pool should~~and shall drain over 24 hours.
- Maintain substrate in saturated condition.

~~GEOMETRY~~

- ~~For a Shallow WVTS: Minimum flowpath of 2:1 (length to width).~~
- ~~For a Gravel WVTS: Minimum flowpath of 1:1 (L:W) for each treatment cell with a minimum flow path (L) within the gravel substrate of 15 ft.~~

STORMWATER MANAGEMENT SUITABILITY

- [x] Water Quality
- [ ] Recharge
- [x] Channel Protection
- [x] Overbank Flood Control

Accepts LUHPPL Runoff: *Yes*

(3 feet of separation distance required to water table)

IMPLEMENTATION CONSIDERATIONS

M Capital Cost

Maintenance Burden:

M Shallow WVTS

M Gravel WVTS

Residential Subdivision Use: Yes

High-Density/Ultra-Urban: *No*

Drainage Area: *Shallow WVTS-10 acres min. and Gravel WVTS-5 acres min., unless intercepting groundwater*

Soils: *Highly permeable soils/karst geology may require liner*

Key : L=Low M=Moderate H=High

GEOMETRY • For a Shallow WVTS: Minimum flowpath of 2:1 (length to width). • For a Gravel WVTS: Minimum flowpath of 1:1 (L:W) for each treatment cell with a minimum flow path (L) within the gravel substrate of 15 ft. VEGETATION • Planting plan that indicates methods to establish and maintain coverage. Minimum elements include: delineation of pondscaping zones, selection of species, planting plan, and sequence for planting bed preparation. • WVTS setback 25 ft from maximum surface elevation. • Donor plant material must not be from natural wetlands. MAINTENANCE REQUIREMENTS • Operation and Maintenance Plan to specify reinforcement plantings after second season if 50% coverage not achieved • A maintenance right of way or easement shall extend to a WVTS from a public or private road.	**POLLUTANT REMOVAL** G Phosphorus G Nitrogen F Metals - Cadmium, Copper, Lead, and Zinc removal G Pathogens - Coliform, Streptococci, E. coli removal Key: G=Good F=Fair P=Poor

Section 5.2 Wet Vegetated Treatment Systems

5.2.4 Treatment
Minimum Water Quality Volume (WQ_v)

Required Elements

- For a Shallow WVTS: ~~At least 25% of the WQ_v shall be in "deep water zones" with a depth greater than four feet, a~~A minimum of 35% of the total surface ~~of~~ area shall have a depth of ~~six~~6 inches or less, and at least 65% of the total surface area shall be shallower than 18 inches. At least 10% of the WQ_v shall be provided in a sediment forebay or other pretreatment practice, and at least 25% of the WQ_v shall be provided in "deep water zones" with a depth equal to or greater than 4 feet. The remaining 65% of the WQ_v shall be provided in some combination of shallow permanent pool (depth less than 4 feet) and the extended detention (ED) storage volume above the permanent pool, as applicable. ED storage volume shall not exceed 50% of the WQ_v and shall drain over 24 hours.

- For a Gravel WVTS: At least 10% of the WQ_v shall be provided in a sediment forebay or other pretreatment practice. The remaining 90% of the WQ_v shall be provided in some combination of one or more basins or chambers filled with a minimum 24-inch gravel layer and the open, ~~extended detention (~~ED~~)~~ storage volume above the gravel, as applicable.~~ The portion~~ ED storage volume shall not exceed 50% of the WQ_v ~~provided above the permanent pool~~and shall drain over 24 hours.

Design Guidance

- Water quality storage can be provided in multiple cells. Performance is enhanced when multiple treatment pathways are provided by using multiple cells, longer flow paths, high surface area to volume ratios, complex microtopography, and/or redundant treatment methods (combinations of pool, ED, and ~~marsh~~emergent vegetation).

Section 5.3 Stormwater Infiltration Practices

KEY CONSIDERATIONS

FEASIBILITY

- Soils less than 20% clay~~,~~ and ~~40~~60% silt~~/clay~~.

Treatment Suitability: Infiltration practices typically cannot provide channel protection (CP_v) and/or overbank flood control (Q_p) storage, except on sites where the soil infiltration rate is high (typically greater than 8.3 in/hr). See Section 7.4 for guidance on designing infiltration practices for meeting the requirements for large storm events (i.e., CP_v and Q_p). ~~Extraordinary care should be taken to~~ To assure that long-term infiltration rates are achieved~~ through~~, extraordinary care should be taken to protect the ~~use~~infiltration practice during construction and followed with post-construction inspection and long-term maintenance. Roof runoff from non-LUHPPL sites can be infiltrated directly, without pretreatment, and counted toward both Re_v and WQ_v requirements.

5.3.1 Feasibility

Required Elements

- Soils shall also have a clay content of less than 20% and a silt~~/clay~~ content of less than ~~40~~60%.

Table 5-2
Minimum Horizontal Setbacks from Infiltration Facilities

	Minimum Horizontal Setbacks	
	From small-scale facilities serving ~~single~~ residential properties (ft)	From all other infiltration facilities (ft)
Public Drinking Water Supply Well – Drilled (rock), Driven, or Dug	200	200
Public Drinking Water Supply Well – Gravel Packed, Gravel Developed	400	400
Private Drinking Water Wells	~~25~~50	100
Surface Water Drinking Water Supply Impoundment* with Supply Intake	100	200
Tributaries that Discharge to the Surface Drinking Water Supply Impoundment*	50	100
Coastal Features	50	50
All Other Surface Waters	50	50
Up-gradient from Natural slopes > %15	25	50
Down-gradient from Building Structures**	10	25
Up-gradient from Building Structures**	10	50
Onsite Wastewater Treatment Systems (OWTS)	15	25

*Refer to DEM Onsite Wastewater Treatment System Rules Figures 14-16 for maps of the drinking water impoundments.
**Setback applies only where basement or slab is below the ponding elevation of the infiltration facility. Note that all basements and slabs should be above the SHGT.

5.3.4 Treatment

Required Elements

- Infiltration practices shall be designed to exfiltrate the entire WQ_v through the floor of each practice (i.e., sidewalls are not considered in sizing), unless the depth is greater than ½ the square root of the bottom surface area.

Section 5.4 Permeable Paving

KEY CONSIDERATIONS

FEASIBILITY

- Soils less than 20% clay~~,~~ and ~~40~~60% silt~~/clay~~

There are two major types of permeable paving:

- **Porous asphalt and pervious concrete**. Although they appear to be the same as traditional asphalt or concrete pavement, they have 10%-25% void space and are constructed over a base course that doubles as a reservoir for the stormwater before it infiltrates into the subsoil or is directed to a downstream facility. Required construction specifications for porous asphalt and pervious concrete are located in Appendix F.
- **Pavers**. ~~This type of permeable paving surface includes permeable solid blocks (minimum void ratio of 15%), as well as open-cell grids filled with either gravel or with sandy soil and then planted with turf, set on a prepared base course that doubles as a reservoir for the stormwater before it infiltrates into the subsoil or is directed to a downstream facility.~~ Three alternative paver configurations will be acceptable to the approving agency as water quality BMPs. These are as follows:
  - **Permeable solid blocks or reinforced turf:** This type of permeable paving surface includes permeable solid blocks (where the blocks have a minimum void ratio of 15%) and contain open-cell grids filled with either ASTM No. 8 washed aggregate for (paving blocks) or sandy soil and planted with turf (for reinforced turf applications), set on a prepared base course consisting of a minimum of 1.5 inches of No. 8 washed aggregate, over a minimum of 4 inches of No. 57 washed stone. No. 2 washed stone is used as a reservoir course as necessary to manage variable storm sizes or provide other functions.
  - **Solid blocks with open-cell joints > 15% of surface:** This type of paver surface includes interlocking impermeable solid blocks or open grid cells that must contain permeable void areas (between the impermeable blocks) exceeding 15% of the surface area of the paving system. Permeable void areas are to be filled with ASTM No. 8 washed aggregate and compacted with a minimum 5,000 lb_f plate compactor. Pavers are set on prepared base course materials consisting of a minimum of 1.5 inches of No. 8 washed aggregate, over a minimum of 4 inches of No. 57 washed stone. No. 2 washed stone is used as a reservoir course as necessary to manage variable storm sizes or provide other functions.
  - **Solid blocks with open-cell joints < 15% of surface:** This type of paver surface includes interlocking impermeable solid blocks or open grid cells that must contain permeable void areas (between the impermeable blocks) less than 15% of the surface area of the paving system. Permeable void areas are to be filled with ASTM No. 8 washed aggregate and compacted with a minimum 5,000 lb_f plate compactor. In order to meet the water quality treatment requirements of Standard 3, these types of systems must be designed to provide one inch of surface storage above the permeable pavement system. Pavers are set on

prepared base course materials consisting of a minimum of 1.5 inches of No. 8 washed aggregate, over a minimum of 4 inches of No. 57 washed stone. No. 2 washed stone is used as a reservoir course as necessary to manage variable storm sizes or provide other functions.

5.4.1 Feasibility

Required Elements

- For infiltrating permeable paving practices, underlying soils shall also have a clay content of less than 20% and a silt~~/clay~~ content of less than ~~40~~60%.

Table 5-4
Minimum Horizontal Setbacks from Infiltrating Permeable Pavements

	Minimum Horizontal Setbacks	
	~~For medium- to low-density~~From small-scale facilities serving residential ~~and~~properties OR non-vehicle surface applications (ft)	**For all other applications (ft)**
Public Drinking Water Supply Well – Drilled (rock), Driven, or Dug	200	200
Public Drinking Water Supply Well – Gravel Packed, Gravel Developed	400	400
Private Drinking Water Wells	25	100
Surface Water Drinking Water Supply Impoundment* with Supply Intake	100	200
Tributaries that Discharge to the Surface Drinking Water Supply Impoundment*	50	100
Coastal Features	50	50
All Other Surface Waters	50	50
Up-gradient from Natural slopes > %15	25	50
Down-gradient from Building Structures**	10	25
Up-gradient from Building Structures**	10	50
Onsite Wastewater Treatment Systems (OWTS)	15	25

*Refer to DEM Onsite Wastewater Treatment System Rules Figures 14-16 for maps of the drinking water impoundments.
**Setback does not apply where basement or slab is at or above the surface elevation of the permeable pavement.

Design Guidance

- The permitting agencies may reduce the minimum horizontal setbacks for infiltrating permeable pavements on a case-by-case basis in ~~medium- to low-density~~ residential and non-vehicle surface (e.g., walkways/plazas) applications.

Section 5.5 Filtering Systems

5.5.1 Feasibility
Required Elements

- Unlined filtering systems greater than 1,000 sf in size shall not be located within 15 feet of any OWTS drainfield.

Section 5.7 Open Channel Systems

5.7.1 Feasibility
Required Elements

- Wet swales shall be placed a minimum 50 feet downgradient of any OWTS drainfield.

Section 6.6 Proprietary Devices

6.6.3 Maintenance
Required Elements

- Inspections shall be performed a minimum of 2 times a year. Devices shall be cleaned when pollutant removal capacity is reduced by 50% or more~~.~~, or where 50% or more of the pollutant storage capacity is filled or displaced. Hazardous debris removed shall be disposed of in accordance with State and federal regulations by a properly licensed contractor.

Section 7.4 Stormwater Infiltration Practices for Recharge/Storage Only

Infiltration within sand/gravel formations that have very high permeability rates may allow for infiltration of large volumes of stormwater. On sites where the soil infiltration rate is high (greater than 8.3 in/hr), infiltration practices cannot be used to treat the water quality volume. However, they may be used to provide recharge (Re_v), channel

protection (CP_v) and/or overbank flood control (Q_p) storage (applicants must provide treatment of 100% of the WQ_v prior to direct infiltration). ~~Extraordinary care should be taken to~~ To assure that long-term infiltration rates are achieved ~~through~~, extraordinary care should be taken to protect the ~~use of~~infiltration practice during construction and followed with post-construction inspection and long-term maintenance.

Table 7-2
Minimum Horizontal Setbacks from Infiltration Facilities

	Minimum Horizontal Setbacks	
	From small-scale facilities serving ~~single~~ residential properties (ft)	**From all other infiltration facilities (ft)**
Public Drinking Water Supply Well – Drilled (rock), Driven, or Dug	200	200
Public Drinking Water Supply Well – Gravel Packed, Gravel Developed	400	400
Private Drinking Water Wells	~~25~~50	100
Surface Water Drinking Water Supply Impoundment* with Supply Intake	100	200
Tributaries that Discharge to the Surface Drinking Water Supply Impoundment*	50	100
Coastal Features	50	50
All Other Surface Waters	50	50
Up-gradient from Natural slopes > %15	25	50
Down-gradient from Building Structures~~*~~*	10	25
Up-gradient from Building Structures~~*~~*	10	50
Onsite Wastewater Treatment Systems (OWTS)	15	25

*Refer to DEM Onsite Wastewater Treatment System Rules Figures 14-16 for maps of the drinking water impoundments.
**Setback applies only where basement or slab is below the ponding elevation of the infiltration facility. Note that all basements and slabs should be above the SHGT.

Glossary of Terms

~~CENTER OF MASS METHOD - This is a method for determining detention time as necessary for meeting the CP$_v$ requirement. This method evaluates the difference in time between the center of mass of the inflow and outflow hydrographs. Some TR-55 models calculate the detention time automatically, such as HydroCAD.~~

INFILTRATION PRACTICES – Stormwater treatment practices designed to capture stormwater runoff and infiltrate it into the ground over a period of days~~, including infiltration trenches and infiltration basins~~.

PERMEABLE PAVING MATERIALS - Materials that are alternatives to conventional pavement surfaces and are designed to increase infiltration and reduce stormwater runoff and pollutant loads. Alternative materials include ~~modular~~porous asphalt, pervious concrete~~ paving blocks, modular concrete or plastic lattice, cast-in-place concrete grids~~, and ~~soil enhancement technologies. Stone, gravel,~~various pavers and ~~other low-tech materials can also be used as alternatives for low traffic applications such as driveways, haul roads, and access roads~~open-celled grids.

~~PERMEABLE PAVEMENT – Permeable pavement is similar to conventional asphalt or concrete but is formulated to have more void space for greater water passage through the material.~~

QUALIFYING PERVIOUS AREA – the generally flat, natural or landscaped vegetated areas that are fully stabilized and where discharge from impervious areas may be directed via sheet flow in order to obtain a Stormwater Credit. Specific criteria for qualifying pervious areas are included in Section 4.~~9~~6.

REDEVELOPMENT – Any construction, alteration, or improvement that disturbs a total of 10,000 square feet or more of existing impervious area where the existing land use is commercial, industrial, institutional, governmental, recreational, or multifamily residential. Building demolition is included as an activity defined as “redevelopment”, but building renovation is not. Similarly, removing of roadway materials down to the erodible soil surface is an activity defined as “redevelopment~~”~~,” but simply resurfacing of a roadway surface is not.~~-~~ Pavement excavation and patching that is incidental to the primary project purpose, such as replacement of a collapsed storm drain, is not classified as redevelopment. In general, the requirements in this manual do not apply to projects or portions of projects when the total existing impervious area disturbed is less than 10,000 square feet. However, specific regulatory programs may impose additional requirements. Any creation of new impervious area over portions of the site that are currently pervious is required to comply fully with the requirements of this manual, with the exception of infill projects.

Appendix D

D.3.3 Permeable Pavers

Permeable pavers (as described in Section 5.4) can be used in the driveway and walkway areas associated with the single family home. In general, permeable pavers are designed to promote recharge and decrease peak flows. ~~Figure D-9 is a typical detail for permeable pavers.~~ For more information on specifications and installation, visit the Interlocking Concrete Pavement Institute at http://www.icpi.org/.

~~**Figure D-19 Detail of Permeable Pavers**~~

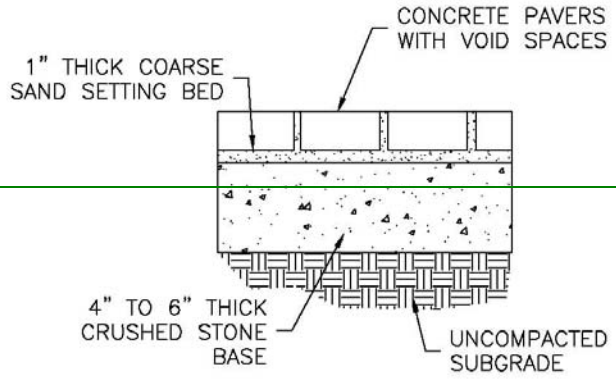

Appendix G

G.4.3 Snow Disposal

Improper snow disposal can be a threat to public health and the environment. Disposal should consider site selection, site preparation and maintenance, and emergency snow disposal locations and procedures. Refer to DEM's Snow Disposal ~~Guidance~~Policy for more details on these topics, which are summarized below.

G.4.3.4 Emergency Snow Disposal

- Do not dispose of snow in coastal or freshwater wetlands, eelgrass beds, vegetated shallows, vernal pools, shellfish beds, mudflats, outstanding resource waters, drinking water reservoirs and their tributaries, Wellhead Protection Areas (WHPAs), or other areas designated by the State as being environmentally sensitive;

Appendix H

Appendix H provides additional information to help designers with the incorporation of stormwater BMPs at their site, including approved testing requirements (e.g., soils testing for infiltration~~) and~~), miscellaneous design details, pollutant loading analyses, and the TR-55 “short-cut” sizing technique.