APPENDIX A: STORMWATER MANAGEMENT ~~PLAN~~ CHECKLIST

The first thing that applicants and designers must do before beginning a project is to make sure they are familiar with the ~~twelve (12)~~11 minimum standards listed in Manual Chapter Three, as projects must meet all ~~twelve~~11 standards. Next, designers should review the available LID site planning and design strategies and ~~BMP management practices~~BMPs in Manual Chapters Four through Seven to determine which would work best at their site. This checklist serves as a guide for engineers and designers to refer to during all stages of a project to ensure that they are meeting all applicable requirements. In addition, designers must include a completed checklist with their final stormwater management plan ~~to meet both Standard 1 and Standard 12~~.

A.1 Checklist for Stormwater Management Plan Preparation and Review

A.1.1 General Information

- ☐ Applicant name, mailing address, and telephone number
- ☐ Contact information for Engineering firm and Rhode Island Registered P.E. responsible for site plans and stormwater management plan
- ☐ Common address and legal description of project site
- ☐ Vicinity map
- ☐ Existing zoning and land use at the project site
- ☐ Proposed land use – indicate if land use meets definition of a LUHPPL (see Manual Table 3-2)
- ☐ General Project Narrative
- ☐ Project type (new development or redevelopment)

A.1.2 Existing and Proposed Mapping and Plans

- ☐ Existing and proposed mapping and plans (scale not greater than 1” = 40’) with North arrow that illustrate at a minimum:
  - ☐ Existing and proposed site topography (2-foot contours required~~)~~). 10-foot contours accepted for off-site areas.
  - ☐ Existing and proposed ~~subwatershed~~drainage area delineations and drainage flow paths, mapped according to the DEM *Guidance for Preparation of ~~Subwatershed~~Drainage Area Maps*~~. Subwatershed~~ (included in Appendix K). Drainage area boundaries need to be complete; include off-site areas in both mapping and analyses, as applicable.

Formatted: Indent: Left: 0", Hanging: 0.38", No bullets or numbering

Formatted: Indent: Left: 0", Hanging: 0.38", No bullets or numbering

- ☐ ____Perennial and intermittent streams, in addition to areas subject to storm flowage (ASSFs)
- ☐ ____Mapping of predominant soils from USDA soil surveys, especially hydric soil groups as well as location of site-specific borings and/or test pits (on ~~subwatershed~~drainage area maps only – not site plans)
- ☐ ____Boundaries of existing predominant vegetation and proposed limits of clearing
- ☐ ____Location and field-verified boundaries of resource protection areas such as freshwater and coastal wetlands, lakes, ponds, coastal shoreline features and required setbacks (e.g., buffers, water supply wells, septic systems)
- ☐ ____Location of floodplain and, if applicable, floodway limits and relationship of site to upstream and downstream properties and drainages
- ☐ ____Location of existing and proposed roads, buildings, and other structures including limits of disturbance
- ☐ ____Existing and proposed utilities (e.g., water, sewer, gas, electric) and easements
- ☐ ____Location of existing and proposed conveyance systems such as grass channels, swales, and storm drains
- ☐ ____Location and dimensions of channel modifications, such as bridge or culvert crossings
- ☐ ____Location, size, and limits of proposed LID planning and site design techniques (type of practice, depth, area). LID techniques should be labeled clearly on the plan and a key should be provided that corresponds to a tabular description.
- ☐ ____Location, size, and limits of disturbance of proposed stormwater treatment practices (type of practice, depth, area). Stormwater treatment practices (BMPs) should be labeled with numbers that correspond to the table in Section A.1.5.
- ☐ ____Soils information from test pits or borings at the location of proposed stormwater management facilities, including but not limited to soil descriptions, depth to seasonal high groundwater, depth to bedrock, and estimated hydraulic conductivity. Soils information will be based on site test pits or borings logged by a ~~certified~~DEM-licensed Class IV ~~Soil Evaluator~~soil evaluator or RI-registered PE.
- ☐ ____8.5 x 11 inch copy of site plan for public notice, as applicable.

A.1.3 Minimum Stormwater Management Standards

- ☐ **Minimum Standard 1: LID Site Planning and Design Strategies**

Formatted: Condensed by 0.1 pt

Formatted: Indent: Left: 0", Hanging: 0.23", No bullets or numbering

Document specific LID site planning and design strategies and associated methods that were employed for the project ~~(see Manual Chapter Four and the *RI Community LID Guidance Manual* for more details regarding each strategy). If a particular method was not used, justification must be provided along with a description of proposed alternatives.~~in the following table:

LID ~~Strategies~~Site Planning and ~~Associated Methods~~ **Design Checklist**	~~Method incorporated? (check one)~~			~~If no or N/A, you must document why the method is not feasible or not applicable at your site and include a description of proposed alternatives.~~
The applicant must document specific LID site planning and design strategies applied for the project (see Manual Chapter Four and the *RI Community LID Guidance Manual* for more details regarding each strategy). If a particular strategy was not used, a justification and description of proposed alternatives must be provided. If a strategy is not applicable (N/A), applicants must describe why a certain method is not applicable at their site. For example, preserving wetland buffers may be not applicable for sites located outside any jurisdictional wetland buffers. In communities where conservation development or other low-impact development site planning and design processes exist, following the local community conservation development option may help a project achieve this standard.	~~Yes~~	~~No~~	~~N/A[1]~~	
Strategies to Avoid the Impacts				
~~**Preservation of Undisturbed Areas**~~				
1. ~~Limits of disturbance that protect areas to be preserved are clearly indicated on all construction plans.~~				

Formatted: Font: Arial Black, Font color: Black
Formatted Table
Formatted: Font: Arial Black, Font color: Black
Formatted: Centered
Formatted: Font: 16 pt, Bold, Font color: Black
Formatted: Level 1, Space After: 6 pt, Tab stops: 6.88", Left
Formatted: Font: Arial, Not Bold
Formatted: No underline
Formatted: Space After: 0 pt, Numbered + Level: 1 + Numbering Style: 1, 2, 3, … + Start at: 1 + Alignment: Left + Aligned at: 0" + Indent at: 0.25"
Formatted: Font: 14 pt, Bold

[1] ~~N/A refers to "not applicable." If N/A is marked, applicants must describe why a certain method is not applicable at their site. For example, preserving wetland buffers may be not applicable for sites that are not located within buffers to any jurisdictional wetlands.~~

LID ~~Strategies~~Site Planning and ~~Associated Methods~~ **Design Checklist**	~~Method incorporated? (check one)~~			~~If no or N/A, you must document why the method is not feasible or not applicable at your site and include a~~
A. Preservation of Undisturbed Areas				
☐ Not Applied or N/A. *Use space below to explain why:*				
Select from the following list:				
☐ Limits of disturbance clearly marked on all construction plans.				
☐ Mapped soils by Hydrologic Soil Group (HSG).				
☐ Building envelopes avoid steep slopes, forest stands, riparian corridors, HSG D soils, and floodplains.				
☐ New lots, to the extent practicable, have been kept out of freshwater and coastal wetland jurisdictional areas.				
☐ Important natural areas (i.e., undisturbed forest, riparian corridors, and wetlands) identified and protected with permanent conservation easement.				
☐ Percent of natural open space calculation is provided.				
☐ Other (describe):				
Explain constraints when a strategy is applied and/or proposed alternatives in space below:				
_____				
_____				
_____				
_____				

Formatted: Font: Arial Black, Font color: Black

Formatted: Font: Arial Black, Font color: Black

Formatted Table

Formatted: Centered

Formatted: Font: 16 pt, Bold, Font color: Black

Formatted: Font: Arial, 10 pt

Formatted: Font: 12 pt, Not Bold

Formatted: Space After: 0 pt

LID ~~Strategies~~Site Planning and ~~Associated Methods~~ **Design Checklist**	~~Method incorporated? (check one)~~			~~If no or N/A, you must document why the method is not feasible or not applicable at your site and include a~~
B. ~~Delineated building envelopes that avoid steep slopes, forest stands, riparian corridors, HSG D soils, and floodplains.~~**Preservation of Buffers and Floodplains** ☐ Not Applied or N/A. *Use space below to explain why:* *Select from the following:* ☐ Applicable vegetated buffers of coastal and freshwater wetlands and perennial and intermittent streams have been preserved, where possible. ☐ Limits of disturbance included on all construction plans that protect applicable buffers ☐ Other (describe): *Explain constraints and/or proposed alternatives in space below:* _____ _____ _____ _____ _____ _____ _____ _____				

Formatted: Font: Arial Black, Font color: Black
Formatted Table
Formatted: Font: Arial Black, Font color: Black
Formatted: Centered
Formatted: Font: 16 pt, Bold, Font color: Black
Formatted: Font: 12 pt, Font color: Black
Formatted: Space After: 0 pt

LID ~~Strategies~~Site Planning and ~~Associated Methods~~ **Design Checklist**	~~Method incorporated? (check one)~~			~~If no or N/A, you must document why the method is not feasible or not applicable at your site and include a~~
C. ~~New lots, to the extent possible, have been kept out of freshwater and coastal wetland jurisdictional areas.~~ **Minimized Clearing and Grading** ☐ Not Applied or N/A. *Use space below to explain why:* *Select from the following list:* ☐ Site fingerprinting to extent needed for building footprints, construction access and safety (i.e., clearing and grading limited to 15 feet beyond building pad or 5 feet beyond road bed/shoulder). ☐ Other (describe): *Explain constraints and/or proposed alternatives in space below:* _____ _____ _____ _____ _____ _____ _____ _____				

Formatted: Font: Arial Black, Font color: Black
Formatted Table
Formatted: Font: Arial Black, Font color: Black
Formatted: Centered
Formatted: Font: 16 pt, Bold, Font color: Black
Formatted: Font: 12 pt
Formatted: Space After: 6 pt

LID ~~Strategies~~Site Planning and ~~Associated Methods~~ **Design Checklist**	~~Method incorporated? (check one)~~			~~If no or N/A, you must document why the method is not feasible or not applicable at your site and include a~~
~~Important natural site features such as undisturbed forest, riparian corridors, and wetlands that have been identified and protected by a permanent conservation easement.~~ **D.** ~~The calculation of the percent of natural open space is provided.~~**Locating Sites in Less Sensitive Areas** ☐ Not Applied or N/A. *Use space below to explain why:* *Select from the following list:* ☐ A site design process, such as conservation development, used to avoid or minimize impacts to sensitive resources such as floodplains, steep slopes, erodible soils, wetlands, hydric soils, surface waters, and their riparian buffers. ☐ Development located in areas with least hydrologic value (e.g., soil groups A and B) ☐ Development on steep slopes, grading and flattening of ridges has been avoided to the maximum extent practicable. ☐ Other (describe): *Explain constraints and/or proposed alternatives in space below:* _____ _____ _____ _____ _____ _____ _____ _____				

Formatted: Font: Arial Black, Font color: Black

Formatted Table

Formatted: Font: Arial Black, Font color: Black

Formatted: Centered

Formatted: Font: 16 pt, Bold, Font color: Black

Formatted: Font: 12 pt

LID ~~Strategies~~Site Planning and ~~Associated Methods~~ **Design Checklist**	~~Method incorporated? (check one)~~			~~If no or N/A, you must document why the method is not feasible or not applicable at your site and include a~~
~~Preservation of Buffers and Floodplains~~				
E. ~~Applicable vegetated buffers of coastal and freshwater wetlands and perennial and intermittent streams have been preserved.~~**Compact Development** ☐ Not Applied or N/A. *Use space below to explain why:* *Select from the following list:* ☐ A site design technique (e.g., conservation development) used to concentrate development to preserve as much undisturbed open space as practicable and reduce impervious cover. ☐ Reduced setbacks, frontages, and right- of- way widths have been used where practicable. ☐ Other (describe): *Explain constraints and/or proposed alternatives in space below:* _____ _____ _____ _____ _____ _____ _____ _____				

Formatted: Font: Arial Black, Font color: Black

Formatted Table

Formatted: Font: Arial Black, Font color: Black

Formatted: Centered

Formatted: Font: 16 pt, Bold, Font color: Black

Formatted: Font: 12 pt, Font color: Auto

Formatted: Space After: 0 pt

LID ~~Strategies~~Site Planning and ~~Associated Methods~~ **Design Checklist**	~~Method incorporated? (check one)~~			~~If no or N/A, you must document why the method is not feasible or not applicable at your site and include a~~
F. ~~Limits of disturbance have been delineated on all construction plans that protect applicable buffers of wetlands, perennial, and intermittent streams.~~**Work with the Natural Landscape Conditions, Hydrology, and Soils** ☐ Not Applied or N/A. *Use space below to explain why:* *Select from the following list:* ☐ Stormwater management system mimics pre-development hydrology to retain and attenuate runoff in upland areas (e.g., cuts and fills limited and BMPs distributed throughout site; trees used for interception and uptake). ☐ The post-development time of concentration (t_c) should approximate pre-development t_c. ☐ Flow velocity in graded areas as low as practicable to avoid soil erosion (i.e., slope grade minimized). Velocities shall not exceed velocities in Appendix B, Table B-2. ☐ Plans show measures to prevent soil compaction in areas designated as Qualified Pervious Areas (QPAs) for better infiltration. ☐ Site designed to locate buildings, roadways and parking to minimize grading (cut and fill quantities) ☐ Other (describe): *Explain constraints and/or proposed alternatives in space below:* _____ _____ _____ _____ _____ _____ _____ _____				
~~**Reduction of Clearing and Grading**~~ ~~Clearing and grading has been restricted to the minimum amount needed for building footprints, construction access and safety. Limits of disturbance have been restricted to no more than the building pad plus 15 feet and the road bed and shoulder areas plus 5 feet.~~**2. Strategies to Reduce the Impacts**				

Formatted: Font: Arial Black, Font color: Black

Formatted: Font: Arial Black, Font color: Black

Formatted Table

Formatted: Centered

Formatted: Font: 16 pt, Bold, Font color: Black

Formatted: Font: 12 pt

Formatted: List Paragraph, Space After: 0 pt, Adjust space between Latin and Asian text, Adjust space between Asian text and numbers

Formatted: Font: Bold

LID ~~Strategies~~Site Planning and ~~Associated Methods~~ **Design Checklist**	~~Method incorporated? (check one)~~			~~If no or N/A, you must document why the method is not feasible or not applicable at your site and include a~~
~~Locating Sites in Less Sensitive Areas~~ ~~A site design process, such as conservation development, has been used to avoid or minimize impacts to sensitive resources such as floodplains, steep slopes, erodible soils, wetlands, hydric soils, surface waters, and their riparian buffers.~~**Reduce Impervious Cover** ☐ Not Applied or N/A. *Use space below to explain why:* *Select from the following list:* ☐ Reduced roadway widths ☐ Reduce driveway areas ☐ Reduced sidewalk area ☐ Reduced cul-de-sacs ☐ Other (describe): *Explain constraints and/or proposed alternatives in space below:* _____ _____ _____ _____ _____ _____ _____ _____				
~~Development has been located in the areas with the least hydrologic value on the site.~~**3. Strategies to Manage the Impacts**				

Formatted: Font: Arial Black, Font color: Black

Formatted: Font: Arial Black, Font color: Black

Formatted Table

Formatted: Centered

Formatted: Font: 16 pt, Bold, Font color: Black

Formatted: Font: 12 pt, Font color: Black

Formatted: List Paragraph, Space After: 0 pt, Adjust space between Latin and Asian text, Adjust space between Asian text and numbers

Formatted: Font: Bold, Font color: Black

LID ~~Strategies~~Site Planning and ~~Associated Methods~~ **Design Checklist**	~~Method incorporated? (check one)~~			~~If no or N/A, you must document why the method is not feasible or not applicable at your site and include a~~
A. ~~Development on steep slopes, grading and flattening of ridges has~~**Disconnecting Impervious Area** ☐ Not Applied or N/A. *Use space below to explain why:* *Select from the following list:* ☐ Impervious surfaces have been ~~avoided~~disconnected to QPAs to the extent ~~practical.~~ possible. ☐ Other (describe): *Explain constraints and/or proposed alternatives in space below:* _____ _____ _____ _____ _____ _____				

Formatted: Font: Arial Black, Font color: Black

Formatted: Font: Arial Black, Font color: Black

Formatted Table

Formatted: Centered

Formatted: Font: 16 pt, Bold, Font color: Black

Formatted: Font: Arial, 10 pt

Formatted: Font: Arial, 10 pt

Formatted: Font: 12 pt, Font color: Black

Formatted: Space After: 0 pt, No widow/orphan control, Adjust space between Latin and Asian text, Adjust space between Asian text and numbers

LID ~~Strategies~~Site Planning and ~~Associated Methods~~ **Design Checklist**	~~Method incorporated? (check one)~~			~~If no or N/A, you must document why the method is not feasible or not applicable at your site and include a~~
~~Compact Development~~				
B. Mitigation of Runoff at the point of generation				
☐ Not Applied or N/A ~~site design technique such as conservation development~~. *Use space below to explain why:*				
Select from the following list:				
☐ Roof runoff has been ~~used to concentrate development~~directed to ~~preserve~~a QPA, such as a yard or vegetated area.				
☐ Roof runoff has been directed to a lower impact practice such as ~~much undisturbed open space as possible and~~a rain barrel or cistern.				
☐ A green roof has been designed to reduce ~~impervious cover.~~runoff.				
☐ Small-scale BMPs applied at source.				
☐ Other (describe):				
Explain constraints and/or proposed alternatives in space below:				
_____				
_____				
_____				

Formatted: Font: Arial Black, Font color: Black
Formatted Table
Formatted: Font: Arial Black, Font color: Black
Formatted: Centered
Formatted: Font: 16 pt, Bold, Font color: Black
Formatted: Font: Arial, 12 pt, Font color: Auto
Formatted: Font: Arial, 10 pt, Font color: Auto
Formatted: Font: Arial, 10 pt, Font color: Auto
Formatted: Font: Arial, 10 pt, Font color: Auto
Formatted: Font: Arial, 10 pt, Font color: Auto
Formatted: Font: 12 pt, Font color: Auto
Formatted: Indent: Left: 0.28"

LID ~~Strategies~~Site Planning and ~~Associated Methods~~ **Design Checklist**	~~Method incorporated? (check one)~~			~~If no or N/A, you must document why the method is not feasible or not applicable at your site and include a~~
C. ~~Reduced setbacks, frontages, and right-of-way widths have been used where possible.~~**Stream/Wetland Restoration** ☐ Not Applied or N/A. *Use space below to explain why:* *Select from the following list:* ☐ Historic drainage patterns have been restored by removing closed drainage systems and/or restoring degraded stream channels and/or wetlands. ☐ Removal of invasive species. ☐ Other (describe): *Explain constraints and/or proposed alternatives in space below:* _____				
D. ~~Work with~~**Reforestation** ☐ Not Applied or N/A. *Use space below to explain why:* *Select from the* ~~**Natural Landscape Conditions, Hydrology**~~ *following list:* ☐ Low maintenance, native vegetation has been proposed. ☐ Trees are proposed to be planted or conserved to reduce runoff volume, increase nutrient uptake, and ~~**Soils**~~provide shading and habitat. ~~The stormwater management system mimics natural predevelopment hydrology to retain and attenuate runoff in upland areas.~~ ☐ Other (describe): *Explain constraints and/or proposed alternatives in space below:* _____				

Formatted: Font: Arial Black, Font color: Black
Formatted Table
Formatted: Font: Arial Black, Font color: Black
Formatted: Centered
Formatted: Font: 16 pt, Bold, Font color: Black
Formatted: Font: 12 pt, Font color: Auto
Formatted: Indent: Left: 0.28"
Formatted: Font: Arial, 12 pt, Not Bold, Italic, Font color: Auto
Formatted: No Spacing, Indent: Left: 0.47", Hanging: 0.31"
Formatted: Font: Arial, 10 pt, Not Bold, Font color: Auto
Formatted: Font: Arial, 10 pt, Not Bold, Font color: Auto
Formatted: Font: 12 pt, Font color: Auto
Formatted: Indent: Left: 0.28"

LID ~~Strategies~~Site Planning and ~~Associated Methods~~ **Design Checklist**	~~Method incorporated? (check one)~~			~~If no or N/A, you must document why the method is not feasible or not applicable at your site and include a~~
E. ~~The postdevelopment time of concentration (Tc) should approximate the predevelopment Tc.~~**Source Control** ☐ Not Applied or N/A. *Use space below to explain why:* *Select from the following list:* ☐ Source control techniques such as street sweeping or pet waste management have been proposed. ☐ Other (describe): *Explain constraints and/or proposed alternatives in space below:* _____ _____ _____ _____ _____ _____				
~~The travel time throughout individual lots and areas is approximately constant.~~				
~~Flow velocity in areas that are graded are kept as low as possible to avoid soil erosion~~				
~~Soil compaction has been minimized~~				
~~Site is designed to locate buildings, roadways and parking to minimize grading (cut and fill quantities)~~				

Formatted: Font: Arial Black, Font color: Black

Formatted Table

Formatted: Font: Arial Black, Font color: Black

Formatted: Centered

Formatted: Font: 16 pt, Bold, Font color: Black

Formatted: Font: 12 pt, Bold, Font color: Auto

Formatted: List Paragraph, Indent: Left: 0.25"

	LID ~~Strategies~~Site Planning and ~~Associated Methods~~ **Design Checklist**				~~Method incorporated? (check one)~~	~~If no or N/A, you must document why the method is not feasible or not applicable at your site and include a~~
	~~**Reduce the Impacts**~~ ~~**Reduction of Roadway Area**~~				~~Applicants must provide local municipal requirements for each strategy listed under "Reduce the Impacts"~~	
	~~**Reduction of Sidewalk Area**~~					
	~~**Reduction of Driveway Area**~~					
	~~**Reduction of Cul-de-Sac Area**~~					
	~~**Reduction of Building Footprint**~~					
	~~**Reduction of Parking Lot Area**~~					
	~~**Manage the Impacts**~~ ~~**Disconnecting Impervious Area**~~ ~~Impervious surfaces have been disconnected to qualified pervious areas to the extent possible.~~					

Formatted: Font: Arial Black, Font color: Black

Formatted Table

Formatted: Font: Arial Black, Font color: Black

Formatted: Centered

Formatted: Font: 16 pt, Bold, Font color: Black

LID ~~Strategies~~Site Planning and ~~Associated Methods~~ Design Checklist					~~Method incorporated? (check one)~~	~~If no or N/A, you must document why the method is not feasible or not applicable at your site and include a~~
~~**Mitigation of Runoff**~~ ~~Roof runoff has been directed to a qualified pervious area, such as a yard or vegetated area.~~						
~~Roof runoff has been directed to a lower impact practice such as a rain barrel or cistern.~~						
~~A green roof has been designed to reduce runoff.~~						
~~**Stream Restoration**~~ ~~Historic drainage patterns have been restored by removing closed drainage systems and/or restoring degraded stream channels~~						
~~**Reforestation**~~ ~~Trees are proposed to be planted or conserved to reduce runoff volume, increase nutrient uptake, and provide shading and habitat.~~						
~~Low maintenance landscaping and native vegetation has been proposed.~~						

Formatted: Font: Arial Black, Font color: Black

Formatted Table

Formatted: Font: Arial Black, Font color: Black

Formatted: Centered

Formatted: Font: 16 pt, Bold, Font color: Black

☐ **Minimum Standard 2: Groundwater Recharge**

Demonstrate that groundwater recharge criteria for the site have been met. Include:

☐ The required recharge volume (Re_v) in acre-feet (See Manual Section 3.3.2)

Formatted: Indent: Left: 0", Hanging: 0.23", No bullets or numbering

Formatted: Indent: Left: 0", Hanging: 0.23", No bullets or numbering

- ☐ LID Stormwater Credit from Checklist Section A.1.4 to be applied to recharge requirement, if applicable, with the following calculations (See Manual Section 4.6.1):
  - the recharge area (Re_a) in acres for the site
  - the site impervious area draining to QPAs
  - the new ~~recharge volume (~~Re_v~~)~~ requirement
- ☐ Specific BMPs from Checklist Section A.1.5 that will be used to meet the recharge requirement. *Note: Only BMPs listed in Manual Table 3-5, List of BMPs Acceptable for Recharge may be used to meet the recharge requirement.*

Formatted: Indent: Left: 0", Hanging: 0.23", No bullets or numbering

- ☐ **Minimum Standard 3: Water Quality**

Formatted: Indent: Left: 0", Hanging: 0.23", No bullets or numbering

Demonstrate that the water quality criteria for the site have been met. Include:

- ☐ Required water quality volume (WQ_v) in acre-feet or ft^3 (see Manual Section 3.3.3).

Formatted: Indent: Left: 0", Hanging: 0.23", No bullets or numbering

- ☐ LID Stormwater Credit from Checklist Section A.1.4 to be applied to water quality requirement, if applicable, with the following calculations (see Manual Section 4.6.1):
  - the new impervious area (in acres) for the site
  - the new ~~water quality volume requirement (~~WQ_v~~)~~ in acre-feet or ft^3
- ☐ Specific BMPs from Checklist Section A.1.5 that will be used to meet water quality volume requirement. *Note: Only BMPs listed in Manual Table 3-6, Acceptable BMPs for Water Quality Treatment may be used to meet the water quality requirement.*

Formatted: Indent: Left: 0", Hanging: 0.23", No bullets or numbering

- ☐ Specify any additional pollutant-specific requirements and/or pollutant removal efficiencies applicable to the site as the result of SAMP, TMDL, or other watershed-specific requirements.

- ☐ **Minimum Standard 4: Conveyance and Natural Channel Protection**

Formatted: Indent: Left: 0", Hanging: 0.23", No bullets or numbering

Demonstrate that the conveyance and natural channel protection criteria for the site have been met. Include:

- ☐ Justification for channel protection criterion waiver, if applicable (see Manual Section 3.3.4).

Formatted: Indent: Left: 0", Hanging: 0.23", No bullets or numbering

- ☐ Required channel protection volume (CP_v) (see Manual Section 3.3.4).
- ☐ Specific BMPs from Checklist Section A.1.5 that will be used to meet the channel protection requirement. Hydrologic and hydraulic site evaluation as described in Manual Section 3.3.4 should be included in Checklist Section A.1.5 for each channel protection BMP.

☐ **Minimum Standard 5: Overbank Flood Protection**

Demonstrate that the overbank flood protection criteria for the site have been met. Include:

- ☐ Justification for overbank flood protection criterion waiver, if applicable (see Manual Section 3.3.5).
- ☐ Pre- and post-development peak discharge rates.
- ☐ Specific BMPs from Checklist Section A.1.5 that will be used to meet the overbank flood protection requirement. Hydrologic and hydraulic site evaluation as described in Manual Section 3.3.4 should be included in Checklist Section A.1.5 for each overbank flood protection BMP.

☐ **Minimum Standard 6: Redevelopment and Infill Projects**

Demonstrate that criteria for redevelopment and/or infill projects have been met, if applicable. Include:

- ☐ Description of site that meets redevelopment/infill definition.
- ☐ Approved off-site location within watershed where stormwater management requirements will be met, if applicable (see Manual Section 3.2.6).

☐ **Minimum Standard 7: Pollution Prevention**

Demonstrate that the project meets the criteria for pollution prevention. Include:

- ☐ Stormwater pollution prevention plan

☐ **Minimum Standard 8: LUHPPLs**

Demonstrate that the project meets the criteria for LUHPPLs, if applicable. Include:

- ☐ Description of any land use activities considered stormwater LUHPPL (see Manual Table 3-2).
- ☐ Specific BMPs listed in Checklist Section A.1.5 that receive stormwater from LUHPPL drainage areas. These BMP types must be listed in Manual Table 3-3, "Acceptable BMPs for Use at LUHPPLs."
- ☐ Additional BMPs, if any, that meet RIPDES MSGP requirements.

☐ **Minimum Standard 9: Illicit Discharges**

~~Demonstrate~~Applicant asserts that ~~there are~~ no illicit discharges exist or are proposed to the stormwater management system in accordance with State regulations.

Formatted: Indent: Left: 0", Hanging: 0.23", No bullets or numbering

Formatted: Indent: Left: 0", Hanging: 0.23", No bullets or numbering

Formatted: Indent: Left: 0", Hanging: 0.23", No bullets or numbering

Formatted: No bullets or numbering

Formatted: Indent: Left: 0", Hanging: 0.25", No bullets or numbering

Formatted: Indent: Left: 0", Hanging: 0.23", No bullets or numbering

Formatted: Indent: Left: 0", Hanging: 0.23", No bullets or numbering

Formatted: Indent: Left: 0", Hanging: 0.23", No bullets or numbering

Formatted: Indent: Left: 0", Hanging: 0.23", No bullets or numbering

Formatted: Indent: Left: 0", Hanging: 0.23", No bullets or numbering

☐ **Minimum Standard 10: Construction Erosion and Sedimentation Control**

Demonstrate that ~~erosion and sedimentation control (~~ESC~~)~~ practices will be used during the construction phase and land disturbing activities. Include:

- ☐ Description of temporary sediment trapping and conveyance practices, including sizing calculations and method of temporary and permanent stabilization (see Manual Section 3.2.9 and *the Rhode Island Soil Erosion and Sediment Control Handbook*).
- ☐ Description of sequence of construction. Activities should be phased to avoid compacting soil during construction, particularly in the location of infiltrating stormwater practices and qualifying pervious areas for stormwater credits.
- ☐ Location of construction staging and material stockpiling areas.

☐ **Minimum Standard 11: Stormwater Management System Operation and Maintenance**

Provide a stormwater management system operation and maintenance plan that at a minimum includes:

- ☐ Name, address, and phone number of responsible parties for maintenance
- ☐ Description of annual maintenance tasks
- ☐ Description of applicable easements
- ☐ Description of funding source
- ☐ Minimum vegetative cover requirements
- ☐ Access and safety issues

A.1.4 LID Stormwater Credit

Description of stormwater credit, if applicable. Label ~~Qualifying Pervious Areas~~qualifying pervious areas (QPAs) on the site map, and document that all stormwater credit requirements listed in ~~Manual~~ Section 4.6 are met ~~for the site.~~. For each QPA, note the impervious area (in acres) that drains to it, and place a check in the appropriate box to demonstrate that it meets the following criteria:

	QPA 1	QPA 2	QPA 3	QPA 4
Impervious Area Draining to QPA (acres)				
QPA Criteria	**Criterion Met?**			

Formatted: Indent: Left: 0", Hanging: 0.23", No bullets or numbering

Formatted: Indent: Left: 0", Hanging: 0.23", No bullets or numbering

Formatted: Indent: Left: 0", Hanging: 0.23", No bullets or numbering

Formatted: No bullets or numbering

Formatted: Font: Bold

Formatted: Font: Bold

Formatted Table

Formatted: Font: Bold

Formatted: Font: Bold

	QPA 1	QPA 2	QPA 3	QPA 4
Construction vehicles shall not be allowed to drive over the QPA during construction. If the area becomes compacted, soil must be suitably amended, tilled, and revegetated once construction is complete to restore infiltration capacity.				
QPA infiltration area is at least 10ft from building foundation.				
Contributing impervious area does not exceed 1,000 ft^2.				
Length of QPA in feet is equal to or greater than the contributing rooftop area in ft^2 divided by 13.3. The maximum contributing flow path from non-rooftop impervious areas is 75ft.				
QPA does not overlap any other QPA.				
Lot is greater than 6,000 ft^2.				
The slope of the QPA is less than or equal to 5.0%.				
Disconnected downspouts draining to QPA are at least 10 feet away from the nearest impervious surface.				
Runoff from rooftops without gutters / downspouts that drains to QPA flows away from the structure as low-velocity sheet flow.				
QPA is located on Hydrologic Soil Group (HSG) A or B soils.				
Depth to groundwater within QPA is 18 inches or greater (has been confirmed by evaluation by a ~~RI-certified~~DEM-licensed Class IV ~~Soil Evaluator~~soil evaluator or RI-registered PE).				
Runoff is directed over soft shoulders, through curb cuts or level spreaders to QPA.				
Measures are employed at discharge point to prevent erosion and promote sheet flow.				
The flow path through the QPA complies with the setback requirements for structural infiltration BMPs.				
Rooftop runoff draining to QPA from LUHPPLs does not commingle with runoff from any paved surface or areas that may generate higher pollutant loads				

Formatted: Font: Bold
Formatted Table
Formatted: Font: Bold
Formatted: Font: Bold
Formatted: Font: Bold
Formatted Table
Formatted: Condensed by 0.1 pt
Formatted: Condensed by 0.1 pt

	QPA 1	QPA 2	QPA 3	QPA 4
~~Construction vehicles shall not be allowed to drive over the QPA during construction. If the area becomes compacted, soil must be amended, tilled and revegetated once construction is complete~~				
Inspection and maintenance of the QPA is included in the site Operation and Maintenance Plan (Minimum Standard 11). The QPA is owned or controlled by the property owner There is no history of groundwater seepage and / or basement flooding on the property				

Formatted: Font: Bold
Formatted: Font: Bold
Formatted: Font: Bold
Formatted: Font: Bold
Formatted Table
Formatted Table

A.1.5 Best Management Practices

Provide detailed information for all structural stormwater best management practices (BMPs) to be implemented. *Note: If a BMP cannot meet the required design criteria in Manual Chapters Five, Six, and Seven, a different BMP should be considered*.

Fill in the following table to document which proposed practices meet which requirement(s). Number each BMP and label them accordingly on the site map:

BMP No.	Type of BMP	Check the function provided by the BMP				
		Pretreatment	Re_v	WQ_v	CP_v	Q_p

Formatted Table

BMP No.	Type of BMP	Check the function provided by the BMP				
		Pretreatment	Re_v	WQ_v	CP_v	Q_p

Formatted Table

In addition, for all structural components of stormwater system (e.g., storm drains, open channels, swales, stormwater BMPs, etc.) provide the following, if applicable:

- ~~☐~~ ☐ Hydrologic and hydraulic analysis, including:
  - Study design/analysis points. The existing and proposed condition analyses need to compare the same overall area; thus, common study points are needed for both existing and proposed conditions.
  - Existing condition analysis for ~~subwatershed~~drainage area boundaries, curve numbers, times of concentration~~s~~, runoff rates, volumes, velocities, and water surface elevations showing methodologies used and supporting calculations~~-~~.
  - Proposed condition analysis for ~~subwatershed~~drainage area boundaries, curve numbers, times of concentration~~s~~, runoff rates, volumes, velocities, water surface elevations, and routing showing the methodologies used and supporting calculations.
  - Downstream Analysis, where required (see Manual Section 3.3.6~~)~~).
  - Final sizing calculations for structural stormwater BMPs including, contributing drainage area, storage, and outlet configuration.
  - Stage-discharge or outlet rating curves and inflow and outflow hydrographs for storage facilities (e.g., detention, retention, or infiltration facilities~~)~~).
  - Dam breach analysis, where necessary, for earthen embankments over six (6) feet in height, or a capacity of 15 acre-feet or more, ~~or~~ and that is a significant or high hazard dam.

Formatted: Indent: Left: 0", Hanging: 0.23", No bullets or numbering

Formatted: Indent: Hanging: 0.38"

- ~~Subwatershed~~ Drainage Area Maps prepared in accordance with DEM's *Guidance for Preparation of ~~Subwatershed~~Drainage Area Maps~~.~~* (included in Appendix K).
- Representative cross-section and profile drawings, notes and details of structural stormwater management practices and conveyances (i.e., storm drains, open channels, swales, etc.), which include:
  - Locations, cross sections, and profiles of all streams and drainage swales and their method of stabilization.
  - Existing and proposed structural elevations (e.g., invert of pipes, manholes, etc~~.~~).).
  - Design water surface elevations.
  - Structural details of outlet structures, embankments, spillways, stilling basins, grade control structures, conveyance channels, etc.
  - Logs of borings and/or test pit investigations along with supporting soils/geotechnical report.
- ~~Landscaping~~ Planting plans for structural stormwater BMPs, including:
  - Species, size, planting methods, and maintenance requirements of proposed plan~~dscap~~ting.
- Structural calculations, where necessary.
- Applicable construction specifications.
- Identification of all anticipated applicable local and State permits.
- Identification of all anticipated legal agreements related to stormwater (e.g., off-site easements, deed restrictions, and covenants~~)~~).

Formatted: Font: Book Antiqua, 10 pt

Formatted: Indent: Left: 0.06", Hanging: 0.25", No bullets or numbering

Formatted: Indent: Hanging: 0.38"

Formatted: Indent: Left: 0.06", Hanging: 0.25", No bullets or numbering

Formatted: Indent: Hanging: 0.38"

Formatted: Indent: Left: 0.06", Hanging: 0.25", No bullets or numbering

~~<Page blank intentionally>~~

~~LANDSCAPING~~

APPENDIX B: VEGETATION GUIDELINES AND PLANTING LIST

~~Good landscaping~~Vegetation can often be an important factor in the performance and community acceptance of many stormwater BMPs. This ~~Landscaping~~ Guide provides general background on how to determine the appropriate ~~landscaping region and hydrologic zone~~plant species for use in Rhode Island. This guide also includes tips on how to establish more functional landscapes within stormwater BMPs. General ~~landscaping~~ guidance for all BMPs is discussed, as well as specific guidance for each of the BMP groups, focusing on native, non-invasive species. For coastal-specific areas, designers should also refer to the *Coastal Buffer Zone Planting Guide* (CRMC, 2008) and the *University of Rhode Island Sustainable Coastal Plant List* (URI Cooperative Extension, 2007).

B.1 ~~GENERAL LANDSCAPING~~VEGETATION FOR LID PRACTICES

~~Landscaping~~Choosing appropriate vegetation is a critical element to improve both the function and appearance of stormwater best management practices (BMPs). The first section outlines general guidance that should be considered when plan~~dscapt~~ing any stormwater practice. In addition, specific guidelines are presented for ~~landscaping~~ bioretention areas. In the second section, key factors in selecting plant material for stormwater ~~landscaping~~practices are reviewed, including hardiness zones, physiographic regions, hydrologic zones, and cultural factors.

B.2 NATIVE SPECIES

This manual encourages the use of native plants in LID practices. Native plants are defined as those species which evolved naturally to live in this region of the world. Practically speaking, this refers to those species which grew in Rhode Island before recent human settlement. Many introduced species were weeds brought in by accident; others were intentionally introduced and cultivated for use as food, medicinal herbs, spices, dyes, fiber plants, and ornamentals.

Some introduced species are invasive, have few predators, and can take over naturally occurring species at an alarming rate. ~~Introduced species~~As such, they can often escape cultivation and begin reproducing in the wild. This is significant ecologically because many introduced species out-compete indigenous species and begin to replace them in the wild. ~~Some introduced species are invasive, have few predators, and can take over naturally occurring species at an alarming rate.~~ By planting native species in stormwater management facilities, we can help protect the natural heritage of Rhode Island and provide a legacy for future generations.

Native species also have distinct genetic advantages over non-native species for planting in Rhode Island. Because they have evolved to live here naturally, indigenous plants are best suited for the local climate. This translates into greater survival rates

when planted and less replacement and maintenance during the life of a stormwater management facility. Both of these attributes provide cost savings for the facility owner.

Finally, people often plant exotic species for their ornamental value. While it is important to have aesthetic stormwater management facilities for public acceptance and the maintenance of property value, it is not necessary to introduce foreign species for this purpose. Many native species are aesthetically pleasing and can be used as ornamentals. When selecting ornamentals for LID practices, planting preference should be given to native ornamentals.

B.3 General ~~Landscaping~~Planting Guidance for LID Practices

- Do not plant trees and shrubs within 15 feet of the toe of slope of a dam;
- Do not plant trees or shrubs known to have long tap roots within the vicinity of the earth dam or subsurface drainage facilities;
- Do not plant trees and shrubs within 15 feet of perforated pipes;
- Do not plant trees and shrubs within 25 feet of a hydraulic outlet control structure;
- Provide 15-foot clearance from a non-clogging, low-flow orifice;
- Herbaceous embankment plantings should be limited to 10 inches in height, to allow visibility for the inspector who is looking for burrowing rodents that may compromise the integrity of the embankment;
- Provide slope stabilization methods for slopes steeper than 2:1, such as planted erosion control mats. Also, use seed mixes with quick germination rates in this area. Augment temporary seeding measures with container crowns or root mats of more permanent plant material;
- Utilize erosion control mats and fabrics to protect channels and slopes that may be subject to frequent wash outs;
- Stabilize all water overflows with plant material that can withstand strong current flows. Root material should be fibrous and substantial but lacking a tap root;
- Sod drainage channels subjected to high velocities that are not stabilized by erosion control mats;
- Divert flows temporarily from seeded areas until stabilized;
- Check water tolerances of existing plant materials prior to inundation of area;
- Check salt tolerances for applications accepting roadside drainage/areas of higher salt usage;
- Stabilize aquatic and safety benches with emergent plants and wet seed mixes;
- Do not block maintenance access to structures with trees or shrubs;
- Avoid plantings that will require routine or intensive chemical applications (i.e. turf area);

- Have soil tested to determine if there is a need for amendments;
- Select plants that can thrive with on-site soil with no additional amendments or a minimum of amendments;
- Decrease the areas where turf is used. Use low-maintenance ground cover to absorb run-off;
- Plant stream and edge of water buffers with trees, shrubs, ornamental grasses, and herbaceous materials where possible, to stabilize banks and provide shade;
- Maintain and frame desirable views. Be careful not to block views at entrances, exits, or difficult road curves. Screen or buffer unattractive views into the site;
- Use plants to prohibit pedestrian access to pools or steeper slopes that may be unsafe;
- The designer should carefully consider the long-term vegetation management strategy for the BMP, keeping in mind the "maintenance" legacy for the future owners. Keep maintenance area open to allow future access for maintenance. Provide a planting surface that can withstand the compaction of vehicles using maintenance access roads. Make sure the facility maintenance agreement includes a maintenance requirement of designed plant material;
- Provide Signage for:
    - Stormwater Management Areas to help educate the public when possible
    - Wildflower/native grass areas, when possible, to designate limits of mowing
- Avoid the overuse of any plant materials; and
- Preserve existing natural vegetation when possible.

It is often necessary to test the soil in which you are about to plant in order to determine the following:

- pH - whether acid, neutral, or alkali;
- major soil nutrients - Nitrogen, Phosphorus, Potassium; and
- minerals - such as chelated iron, lime.

Have soil samples analyzed by experienced and qualified individuals, such as those at the ~~URI~~University of Massachusetts Soil Testing Laboratory (http://www.uri.edu/ce/factsheets/sheets/soiltest.html), who will explain in writing the results, what they mean, as well as what soil amendments would be required. Certain soil conditions, such as marine clays, can present serious constraints to the growth of plant materials and may require the involvement of qualified professionals. When poor soils can't be amended, seed mixes and plant material must be selected to establish ground cover as quickly as possible.

Areas that have recently been involved in construction can become compacted so that plant roots cannot penetrate the soil. Seeds lie on the surface of compacted soils, allowing seeds to be washed away or be eaten by birds. Soils should be loosened to a minimum depth of two inches, preferably to a four-inch depth. Hard soils may require tilling to a deeper depth. The soil should be loosened regardless of the ground cover. This will improve seed contact with the soil, providing greater germination rates, allowing the roots to penetrate into the soil. If the area is to be sodded, tilling will allow the roots to penetrate into the soil. Weak or patchy crops can be prevented by providing good growing conditions.

Whenever possible, topsoil should be spread to a depth of four inches (two-inch minimum) over the entire area to be planted. This provides organic matter and important nutrients for the plant material. This also allows the stabilizing materials to become established faster, while the roots are able to penetrate deeper and stabilize the soil, making it less likely that the plants will wash out during a heavy storm.

If topsoil has been stockpiled in deep mounds for a long period of time, it is desirable to test the soil for pH as well as microbial activity. If the microbial activity has been destroyed, it is necessary to inoculate the soil after application.

Remember that newly installed plant material requires water in order to recover from the shock of being transplanted. Be sure that some source of water is provided, should dry periods occur after the initial planting. This will reduce plant loss and provide the new plant materials with a chance to establish root growth. An appropriate watering schedule should be instituted for all plant material based upon plant species requirements and should be followed until plants are fully established.

B.4 Basins and WVTS

For areas that are to be planted within a stormwater management facility, it is necessary to determine what type of hydrologic zones will be created within the facility. The following six zones describe the different conditions encountered in stormwater management facilities. Every facility does not necessarily incorporate all of these zones. The hydrologic zones designate the degree of tolerance the plant exhibits to differing degrees of inundation by water.

Each zone has its own set of plant selection criteria based on the hydrology of the zone, the stormwater functions required of the plant, and the desired ~~landscape~~ effect. The hydrologic zones are described in Table B-1 and illustrated in Figure B-1.

Table B-1 Hydrologic Zones

Zone #	Zone Description	Hydrologic Conditions

Zone 1	Deep Water Pool	1-6 feet deep Permanent Pool
Zone 2	Shallow Water Bench	6 inches to 1 foot deep
Zone 3	Shoreline Fringe	Regularly inundated
Zone 4	Riparian Fringe	Periodically inundated
Zone 5	Floodplain Terrace	Infrequently inundated
Zone 6	Upland Slopes	Seldom or never inundated

Figure B-1 Planting Zones for Stormwater Basins and Wet Vegetated Treatment Systems (WVTS) as they appear in cross-section (Schueler, 1992).

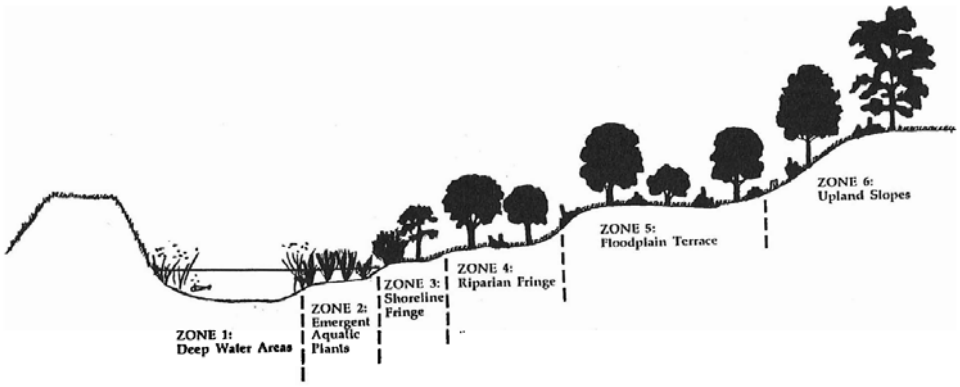

<u>Zone 1: Deep Water Area *(1 - 6 Feet)*</u>

Basins and WVTSs both have deep pool areas that comprise Zone 1. These pools range from one to six feet in depth, and are best colonized by submergent plants, if at all.

This pondscaping zone has not been routinely planted for several reasons. First, the availability of plant materials that can survive and grow in this zone is limited, and it is also feared that plants could clog the stormwater facility outlet structure. In many cases, these plants will gradually become established through natural recolonization (e.g., transport of plant fragments from other basins or natural ponds via the feet and legs of waterfowl). If submerged plant material becomes more commercially available and clogging concerns are addressed, this area can be planted. The function of the

planting is to reduce resedimentation and improve oxidation while creating a greater aquatic habitat.

- Plant material must be able to withstand constant inundation of water of one foot or greater in depth.
- Plants may be submerged partially or entirely.
- Plants should be able to enhance pollutant uptake.
- Plants may provide food and cover for waterfowl, desirable insects, and other aquatic life.

Zone 2: Shallow Water Bench (*Normal Pool to 1 Foot)*

Zone 2 includes all areas that are inundated below the normal pool to a depth of one foot, and is the primary area where emergent plants will grow in WVTSs. Zone 2 also coincides with the aquatic bench found in stormwater basins. This zone offers ideal conditions for the growth of many emergent species. These areas may be located at the edge of the basin or on low mounds of earth located below the surface of the water within the basin. When planted, Zone 2 can be an important habitat for many aquatic and nonaquatic animals, creating a diverse food chain. This food chain includes predators, allowing a natural regulation of mosquito populations, thereby reducing the need for insecticidal applications.

- Plant material must be able to withstand constant inundation of water to depths between six inches and one foot deep.
- Plants will be partially submerged.
- Plants should be able to enhance pollutant uptake.
- Plants may provide food and cover for waterfowl, desirable insects and other aquatic life.

Plants will stabilize the bottom of the basin, as well as the edge of the basin, absorbing wave impacts and reducing erosion, when water level fluctuates. Plants also slow water velocities and increase sediment deposition rates. Plants can reduce resuspension of sediments caused by the wind. Plants can also soften the engineered contours of the basin, and can conceal drawdowns during dry weather.

Zone 3: Shoreline Fringe (*Regularly Inundated*)

Zone 3 encompasses the shoreline of a basin or WVTS, and extends vertically about one foot in elevation from the normal pool. This zone includes the safety bench of a basin, and may also be periodically inundated if storm events are subject to extended detention. This zone ~~occurs in a wet basin or shallow WVTS and~~ can be the most difficult to establish since plants must be able to withstand inundation of water during storms, when wind might blow water into the area, or the occasional drought during the summer. In order to stabilize the soil in this zone, Zone 3 must have a vigorous cover.

- Plants should stabilize the shoreline to minimize erosion caused by wave and wind action or water fluctuation.
- Plant material must be able to withstand occasional inundation of water. Plants will be partially submerged partially at this time.
- Plant material should, whenever possible, shade the shoreline, providing cover for wildlife.
- Plants should be able to enhance pollutant uptake.
- Plants may provide food and cover for waterfowl, songbirds, and wildlife. Plants could also be selected and located to control overpopulation of waterfowl.
- Plants should be located to reduce human access, where there are potential hazards, but should not block the maintenance access.
- Plants should have very low maintenance requirements, since they may be difficult or impossible to reach.
- Plants should be resistant to disease and other problems which require chemical applications (since chemical application is not advised in stormwater basins or WVTSs).

Zone 4: Riparian Fringe (Periodically Inundated)

Zone 4 extends from one to four feet in elevation above the normal pool. Plants in this zone are subject to periodic inundation after storms, and may experience saturated or partly saturated soil inundation. Nearly all of the temporary extended detention area is included within this zone.

- Plants must be able to withstand periodic inundation of water after storms, as well as occasional drought during the dry season.
- Plants should stabilize the ground from erosion caused by uphill run-off.
- Plants should shade the low-flow channel.
- Plants should be able to enhance pollutant uptake.
- Plant material should have very low maintenance, since they may be difficult or impossible to access.
- Plants may provide food and cover for waterfowl, songbirds and wildlife. Plants may also be selected and located to control overpopulation of waterfowl.
- Plants should be located to reduce pedestrian access to the deeper pools.

Zone 5: Floodplain Terrace (*Infrequently Inundated*)

Zone 5 is periodically inundated by flood waters that quickly recede in a day or less. Operationally, Zone 5 extends from the maximum one year or CP_v water surface elevation (WSE) up to the 100-year maximum WSE. Key plan~~dscapt~~ing objectives for Zone 5 are to stabilize the steep slopes characteristic of this zone and to establish a low maintenance, natural vegetation area.

- Plant material should be able to withstand occasional but brief inundation during storms, although typical moisture conditions may be moist, slightly wet, or even swing entirely to drought conditions during the dry season.
- Plants should stabilize the basin slopes from uphill erosion.
- Ground cover should be very low maintenance, since they may be difficult to access on steep slopes or if frequency of mowing is limited. A dense tree cover may help reduce maintenance and discourage nuisance wildlife.
- Plants may provide food and cover for waterfowl, songbirds, and wildlife.
- Placement of plant material in Zone 5 is often critical, as it often creates a visual focal point and provides structure and shade for a greater variety of plants.

Zone 6: Upland Slopes (Seldom or Never Inundated)

The last zone extends above the maximum 100-year WSE, and often includes the setback of a basin or WVTS. Unlike other zones, this upland area may have sidewalks, bike paths, retaining walls, and maintenance access roads. Care should be taken to locate plants so they will not overgrow these routes or create hiding places that might make the area unsafe.

- Plant material is capable of surviving the particular conditions of the site. Thus, it is not necessary to select plant material that will tolerate any inundation. Rather, plant selections should be made based on soil condition, light, and function within the ~~landscape~~BMP.
- Groundcovers should emphasize infrequent mowing to reduce the cost of maintaining this ~~landscape~~BMP.
- Placement of plants in Zone 6 is important since they are often used to create a visual focal point, frame a desirable view, screen undesirable views, serve as a buffer, or provide shade to allow a greater variety of plant materials. Particular attention should be paid to seasonal color and texture of these plantings.

B.5 Infiltration and Sand Filters

Properly planted, infiltration practices and sand filter systems blend into natural surroundings. If unplanted or improperly planted, they can become eyesores and liabilities.

Design Constraints:

- Do not plant trees or provide shade within 15 ft of infiltration or filtering area or where leaf litter will collect and clog infiltration area.
- Have the soil tested in the filtering bed to determine if there is a need for soil amendments.
- Determine depth of water table to determine standing water conditions and depth to constant soil moisture.

- Planting turf over sand filters is allowed with prior approval of the approving agency, on a case-by-case basis.
- Do not locate plants to block maintenance access to structures.
- Divert flows temporarily from seeded areas until stabilized.
- Planting of peat filters or any filter requiring a filter fabric should include material selected with care to insure that no tap roots will penetrate the filter fabric.

B.6 Open Channels

Consult Table B-2 for grass species that perform well in the stressful environment of an open channel or grass filter strip. These practices experience fluctuating water levels and may also experience stormwater flows with high velocities. It is important to choose an appropriate grass species that will thrive given specific site conditions. If open channels are planted with an unsuitable grass species, the grass may become patchy or die back, reducing the overall treatment efficiency of the practice. Wet swales may also be planted with other aquatic species from Table B-6.

Table B-2 Common Grass Species Adapted to Open Channel Practices (Virginia ESC Handbook, 1992)

Common Name	Scientific Name	Slope Range	Permissible Velocity (fps)		Notes
			Erosion Resistant Soils	Easily Eroded Soils	
Kentucky Bluegrass	*Poa pratensis*	0-5	6	3.5	
~~Bermuda Grass~~	~~*Cynodon dactylon*~~	~~5-10~~	~~5~~	~~2.5~~	
Smooth Brome	*Bromus inermis*	~~Over~~ 5-10	5	2.5	Cool~~,~~. Not for wet swales
Buffalo Grass	*Buchloe dactyloides*	Over 10	5	2.5	
Tall Fescue	*Festuca arundinacea*				
~~Grass Mixtures~~		~~0-5**~~	~~6~~	~~3.5~~	
~~Orchard Grass~~	~~*Dactylis glomerata*~~	~~5-10**~~	~~5~~	~~2.5~~	
Creeping Bentgrass	*Agrostis palustris*	0-5~~****~~	6	2.5	Cool~~,~~
Redtop	*Agrostis alba*				Cool~~,~~
Red Fescue	*Festuca rubra*				Cool. Not for Wet swale

Note 1: These grasses are sod-forming and can withstand frequent inundation, and are thus ideal for the swale or grass channel environment. Most are salt-tolerant, as well. Cool refers to cool season grasses.

Note 2: Where possible, one or more of these grasses should be in the seed mixes.

~~* Use with velocities 5 fps or greater only where good covers and proper maintenance can be obtained~~
~~** Do not use on slopes steeper than 10 percent except for vegetated side slopes in combination with a stone, concrete, or highly resistant vegetative center section.~~
~~****~~ Do not use on slopes steeper than 5 percent except for vegetated side slopes in combination with a stone, concrete, or highly resistant vegetative center section.

Formatted Table

Formatted Table

Once grass has been established (seed or sod) their physical characteristics become indistinguishable (~~Sod~~sod will have better erosion resistance initially, but once the seeds develop, the differences are minimal).

B.7 Bioretention Practices

B.7.1 ~~Planting~~Bioretention Soil ~~Bed~~ Characteristics

The characteristics of the soil for the bioretention facility are perhaps as important as the facility location, size, and treatment volume. The soil must be permeable enough to allow runoff to filter through the media, while having characteristics suitable to promote and sustain a robust vegetative cover crop. In addition, much of the nutrient pollutant uptake (nitrogen and phosphorus) is accomplished through adsorption and microbial activity within the soil profile. Therefore, the soils must balance soil chemistry and physical properties to support biotic communities above and below ground.

The ~~planting~~bioretention soil should be a sandy loam, loamy sand, loam (USDA), or a loam/sand mix (should contain 85-88% sand, by volume). The clay content for these soils should by less than 2% by volume. A permeability of at least 2.0 feet per day (1.0 in/hr) is required. The soil should be free of stones, stumps, roots, other woody material over 1inch in diameter, or brush/seeds from noxious weeds. Placement of the planting soil should be in lifts of 12 to 18 inches, loosely compacted (tamped lightly with a dozer or backhoe bucket). The specific characteristics are presented in the table below.

Table B-3 Planting Soil Characteristics

Parameter	Value
Organic matter	3 to 5%
Clay*	0 to 2%
Silt*	0 to 12%
Sand*	85-88%

*Soil characteristics. Augment soils with aged leaf compost and acceptable topsoil.

Mulch Layer

The mulch layer plays an important role in the performance of the bioretention system. The mulch layer helps maintain soil moisture and avoids surface sealing which reduces permeability. Mulch helps prevent erosion, and provides a micro-environment suitable for soil biota at the mulch/soil interface. Mulch also serves as a pretreatment layer, trapping the finer sediments which remain suspended after the primary pretreatment.

The mulch layer should be shredded hardwood mulch that is well aged (stockpiled or stored for at least six (6) months), uniform in color, and free of other materials, such as weed seeds, soil, roots, etc. The mulch should be applied to a maximum depth of three inches. Grass clippings should not be used as a mulch material.

Planting Plan Guidance

Plant material selection should be based on the goal of simulating a terrestrial forested community of native species. Bioretention simulates an ecosystem consisting of an upland-oriented community dominated by trees, but having a distinct community, or sub-canopy, of understory trees, shrubs and herbaceous materials. The intent is to establish a diverse, dense plant cover to treat stormwater runoff and withstand urban stresses from insect and disease infestations, drought, temperature, wind, and exposure.

The proper selection and installation of plant materials is key to a successful system. There are essentially three zones within a bioretention facility. The lowest elevation supports plant species adapted to standing and fluctuating water levels. The middle elevation supports a slightly drier group of plants, but still tolerates fluctuating water levels. The outer edge is the highest elevation and generally supports plants adapted to dryer conditions.

The layout of plant material should be flexible, but should follow the general principals described in ~~the table below.~~Table B-4. Tree density of approximately one tree per 250 square feet (i.e., 15 feet on center) is recommended. Shrubs and herbaceous vegetation should generally be planted at higher densities (5-10 feet on center and 2.5 feet on center, respectively). The objective is to have a system which resembles a random and natural plant layout, while maintaining optimal conditions for plant establishment and growth.

Figure B-2 Planting Zones for Bioretention Facilities

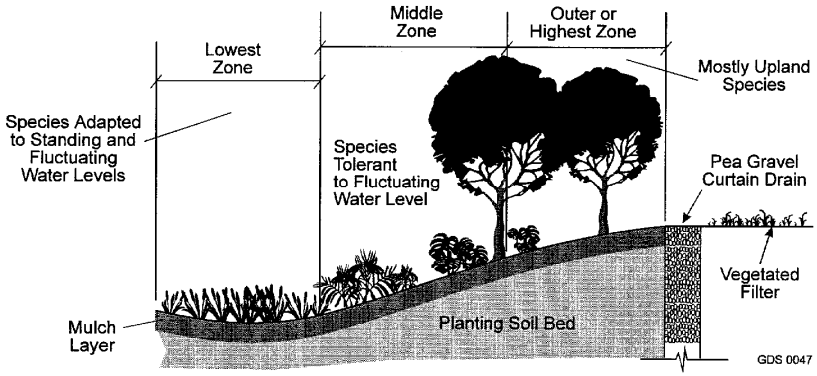

Table B-4 Planting Plan Design Considerations

• Native plant species should be specified over exotic or foreign species.
• Appropriate vegetation should be selected based on the zone of hydric tolerance
• Species layout should generally be random and natural.
• A canopy should be established with an understory of shrubs and herbaceous materials.
• Woody vegetation should not be specified in the vicinity of inflow locations.
• Trees should be planted primarily along the perimeter of the bioretention area.
• Urban stressors (e.g., wind, sun, exposure, insect and disease infestation, drought) should be considered when laying out the planting plan.
• Noxious weeds should not be specified.
• Aesthetics and visual characteristics should be a prime consideration.
• Traffic and safety issues must be considered.
• Existing and proposed utilities must be identified and considered.

Formatted: Indent: Left: 0.26", Tab stops: 0.51", List tab + Not at 1"

Formatted: Indent: Left: 0.26", Tab stops: 0.51", List tab + Not at 1"

Formatted: Indent: Left: 0.26", Tab stops: 0.51", List tab + Not at 1"

Formatted: Indent: Left: 0.26", Tab stops: 0.51", List tab + Not at 1"

Formatted: Indent: Left: 0.26", Tab stops: 0.51", List tab + Not at 1"

Formatted: Indent: Left: 0.26", Tab stops: 0.51", List tab + Not at 1"

Formatted: Indent: Left: 0.26", Tab stops: 0.51", List tab + Not at 1"

Formatted: Indent: Left: 0.26", Tab stops: 0.51", List tab + Not at 1"

Formatted: Indent: Left: 0.26", Tab stops: 0.51", List tab + Not at 1"

Formatted: Indent: Left: 0.26", Tab stops: 0.51", List tab + Not at 1"

Formatted: Indent: Left: 0.26", Tab stops: 0.51", List tab + Not at 1"

Plant Material Guidance

Plant materials should conform to the American Standard Nursery Stock, published by the American Association of Nurserymen, and should be selected from certified, reputable nurseries. Planting specifications should be prepared by the designer and should include a sequence of construction, a description of the contractor's responsibilities, a planting schedule ~~and~~, installation specifications, initial maintenance, ~~and~~ a warranty period, and expectations of plant survival. The table below presents some typical ~~issues~~elements for planting specifications.

Table B-5 Planting Specification ~~Issues~~Elements for Bioretention Areas

Specification Element	**~~Elements~~Description**
Sequence of Construction	Describe site preparation activities, soil amendments, etc.; address erosion and sediment control procedures; specify step-by-step procedure for plant installation through site clean-up.
Contractor's Responsibilities	Specify the contractor's responsibilities, such as watering, care of plant material during transport, timeliness of installation, repairs due to vandalism, etc.
Planting Schedule and Specifications	Specify the materials to be installed, the type of materials (e.g., B&B, bare root, containerized); time of year of installations, sequence of installation of types of plants; fertilization, stabilization seeding, if required; watering and general care.
Maintenance	Specify inspection periods; mulching frequency (annual mulching is most common); removal and replacement of dead and diseased vegetation; treatment of diseased trees; watering schedule after initial installation (once per day for 14 days is common); repair/replacement of staking and wires.
Warranty	Specify ~~the~~ warranty period, required survival rate, and expected condition of plant species at end of warranty period.

Formatted Table

B.8 Other Considerations in LID Practice ~~Landscaping~~Planting

Use or Function

In selecting plants, consider their desired function in the landscape. Is the plant needed as ground cover, soil stabilizer, or a source of shade? Will the plant be placed to frame a view, create focus, or provide an accent? Does the adjacent use provide conflicts or potential problems and require a barrier, screen, or buffer? Nearly every plant and plant location should be selected to serve some function in addition to any aesthetic appeal.

Formatted: No widow/orphan control

Plant Characteristics

Certain plant characteristics are so obvious that they may actually be overlooked in the plant selection. These are:

- Size
- Shape

For example, tree limbs, after several years, can grow into power lines. A wide-growing shrub may block an important line of sight to oncoming vehicular traffic. A small tree could strategically block the view from a second-story window. Consider how these characteristics can work for you or against you, today and in the future.

Other plant characteristics must be considered to determine whether the plant will fit with the landscape today and through the years to come. Some of these characteristics are:

- Color
- Texture
- Aesthetic Interest, i.e.- Flowers, Fruit, Leaves, Stems/Bark
- Growth rate

In urban or suburban settings, residents living next to an LID practice may desire that the facility be appealing or interesting. Aesthetics is an important factor to consider in the design of these systems. Failure to consider the aesthetic appeal of a facility to the surrounding residents may result in reduced value to nearby lots. Careful attention to the design and planting of a facility can result in maintained or increased values of a property.

Availability and Cost

Often overlooked in plant selection is the availability from wholesalers and the cost of the plant material. There are many plants listed in landscape books that are not readily available from the nurseries. Without knowledge of what is available, time spent researching and finding the one plant that meets all the needs will be wasted, if it is not available from the growers. It may require shipping, therefore, making it more costly than the budget may allow. Some planting requirements may require a special effort to find the specific plant that fulfills the needs of the site and ~~the~~will function ~~of the plant~~ in the landscape as desired. Refer to the CRMC Coastal Plant Suppliers by Species list for guidance ~~(www.crmc.ri.gov/pubs/pdfs/CoastalPlant_Suppliers.pdf).~~(www.crmc.ri.gov/pubs/pdfs/CoastalPlant_Suppliers.pdf).

B.9 Rhode Island LID Practices – Acceptable Plant List

The following is a list of acceptable plants for a variety of uses in Rhode Island. For a more complete and interactive listing, refer to the CRMC/URI Rhode Island Interactive Plant Guide (www.edc.uri.edu/personal/erik/coastalplants/coastalplantguide.htm).

B.9.1 Salt-Tolerant Plants

These plant species are suitable for planting within 80 feet of a roadside that is subject to de-icing and anti-icing application of salts.

B.9.1.1 Trees

~~White Oak (*Quercus alba*)~~

~~Red Oak (*Quercus rubra*)~~

~~White Poplar (*Populus alba*)~~

~~Black Locust (*Robinia pseudoacacia*)~~

~~Blue Spruce (*Picea pungens*)~~

~~Green Ash (*Fraxinus pennsylvanica*)~~

~~Eastern Cottonwood (*Populus deltoides*)~~

~~Eastern White Pine (*Pinus strobus*)~~

~~Hawthorn (*Crataegus spp.*)~~

~~Pitch Pine (*Pinus rigida*)~~

Botanical Name	**Common Name**
Crataegus spp.	Hawthorns
Fraxinus pennsylvanica	Green Ash
Picea pungens	Blue Spruce
Pinus strobus	Eastern White Pine
Pinus rigida	Pitch Pine
Populus deltoides	Eastern Cottonwood
Quercus alba	White Oak
Quercus rubra	Red Oak

B.9.1.2 Shrubs

~~Forsythia (*Forsythia x intermedia*)~~

~~Honeylocust (*Gleditsia triacanthos*)~~

Botanical Name	**Common Name**

Forsythia x intermedia	Forsythia
Gleditsia triacanthos	Honeylocust

B.9.1.3 Grasses

~~Birdsfoot trefoil (*Lotus corniculatus*)~~
~~Perennial ryegrass (*Lolium perenne*)~~
~~Switchgrass (*Panicum virgatum*)~~
~~Tall Fescue (*Festuca arundinacea*)~~
~~Alfalfa (*Medicago sativa*)~~
~~Cattails (*Typha domingensis*)~~

Botanical Name	**Common Name**
Festuca arundinacea	Tall Fescue
Lolium perenne	Perennial ryegrass
Medicago sativa	Alfalfa
Panicum virgatum	Switchgrass
Typha domingensis	Cattails

B.9.2 Native Plants/Xeriscaping

These plant species are native or adapted to Southern New England. Information on these species and others that may be suitable for xeriscaping may be found in the references at the end of this appendix.

B.9.2.1 Trees

~~Eastern Red Cedar (*Juniperus virginiana*)~~

~~Flowering Dogwood (*Cornus florida*)~~

~~Hackberry (*Celtis occidentalis*)~~

~~Hawthorns (*Crataegus spp.*)~~

~~Hickories (*Carya spp.*)~~

~~Oaks (*Quercus spp.*)~~

~~Walnuts (*Juglans spp.*)~~

~~Atlantic White Cedar (*Chamaecyparis thyoides*)~~

~~Black Spruce (*Picea mariana*)~~

~~Eastern Hemlock (*Tsuga canadensis*)~~

~~Eastern Red Cedar (*Juniperus virginiana*)~~

~~Northern White Cedar (*Thuja occidentalis*)~~

~~White Pine (*Pinus strobus*)~~

~~Black Cherry (*Prunus serotina*)~~

~~Choke Cherry (*Prunus virginiana*)~~

~~Red Mulberry (*Morus rubra*)~~

Botanical Name	**Common Name**
Carya spp.	Hickories
Celtis occidentalis	Hackberry
Chamaecyparis thyoides	Atlantic White Cedar
Cornus florida	Flowering Dogwood
Crataegus spp.	Hawthorns
Juglans spp.	Walnuts
Juniperus virginiana	Eastern Red Cedar
Morus rubra	Red Mulberry
Picea mariana	Black Spruce
Pinus strobus	White Pine
Prunus serotina	Black Cherry
Prunus virginiana	Choke Cherry
Quercus spp.	Oaks
Thuja occidentalis	Northern White Cedar
Tsuga canadensis	Eastern Hemlock

B.9.2.2 Shrubs

Formatted: Keep lines together

Formatted: Keep with next, Keep lines together

For Dry, Sunny Areas

~~Bayberry (*Myrica pensylvanica*)~~

~~Lowbush Blueberry (*Vaccinium augustifolium*)~~

~~Ground Juniper (*Juniperus communis*)~~

~~Jersey Tea (*Ceanothus americanus*)~~

~~Sweet Fern (*Comptonia peregrina*)~~

Botanical Name	**Common Name**
Ceanothus americanus	Jersey Tea
Comptonia peregrina	Sweet Fern
Juniperus communis	Ground Juniper
Myrica pensylvanica	Bayberry
Vaccinium augustifolium	Lowbush Blueberry

For Shaded Areas

~~Hazelnut (*Corylus americana, C. cornuta*)~~

~~Mountain Laurel (*Kalmia latifolia*)~~

~~Swamp Azalea (*Rhododendron viscosum*)~~

~~Viburnums (*V. acerifolium, V. cassinoides, V. alnifolium*)~~

Botanical Name	**Common Name**
Corylus americana, C. cornuta	Hazelnuts
Kalmia latifolia	Mountain Laurel
Rhododendron viscosum	Swamp Azalea
Viburnum spp.	Viburnums

For Moist Sites

~~Dogwoods (*Cornus spp.*)~~

~~Elderberry (*Sambucus canadensis*)~~

~~Highbush Blueberry (*Vaccinium corymbosum*)~~

~~Inkberry (*Ilex glabra*)~~

~~Pussy Willow (*Salix discolor*)~~

~~Shadbush Serviceberry (*Amelanchier canadensis*)~~

~~Spirea (*Spirea latifolia*)~~

~~Swamp azalea (*Rhododendron viscosum*)~~

~~Sweet Pepperbush (*Clethra alnifolia*)~~

~~Viburnums (*Viburnum spp.*)~~

~~Winterberry (*Ilex verticillata*)~~

~~Witch Hazel (*Hamamelis virginiana*)~~

~~Red Mulberry (*Morus rubra*)~~

Botanical Name	**Common Name**
Amelanchier canadensis	Shadbush Serviceberry
Clethra alnifolia	Sweet Pepperbush
Cornus spp.	Dogwoods
Ilex glabra	Inkberry
Ilex verticillata	Winterberry
Hamamelis virginiana	Witch Hazel
Morus rubra	Red Mulberry
Rhododendron viscosum	Swamp Azalea
Salix discolor	Pussy Willow

Sambucus canadensis	Elderberry
Spiraea latifolia	Spiraea
Vaccinium corymbosum	Highbush Blueberry
Viburnum spp.	Viburnums

B.9.2.3 Perennials

~~Wild red columbine (*Aquilegia canadensis*)~~

~~Bearberry, kinnickinick (*Arctostaphylos uva-ursi*)~~

~~Wild ginger (*Asarum canadense*)~~

~~Butterfly weed (*Asclepias tuberosa*)~~

~~White wood aster (*Aster divaricatus*)~~

~~New England aster (*Aster novae-angliae*)~~

~~Marsh marigold (*Caltha palustris*)~~

~~Wild geranium (*Geranium maculatum*)~~

~~Cardinal flower (*Lobelia cardinalis*)~~

~~Solomon's plume (*Maianthemum racemosum, syn. Smilacina racemosa*)~~

~~Partridgeberry (*Mitchella repens*)~~

~~Wild blue phlox (*Phlox divaricata*)~~

~~Bloodroot (*Sanguinaria canadensis*)~~

~~Foamflower (*Tiarella cordifolia*)~~

~~Barren strawberry (*Waldsteinia fragariodes*)~~

Botanical Name	**Common Name**
Aquilegia canadensis	Wild Red Columbine
Arctostaphylos uva-ursi	Bearberry, Kinnickinick
Asarum canadense	Wild Ginger
Asclepias tuberosa	Butterfly Weed
Aster divaricatus	White Wood Aster
Aster novae-angliae	New England Aster
Caltha palustris	Marsh Marigold
Geranium maculatum	Wild Geranium
Lobelia cardinalis	Cardinal Flower
Maianthemum racemosum, syn. Smilacina racemosa	Solomon's Plume
Mitchella repens	Partridgeberry
Phlox divaricata	Wild Blue Phlox

Sanguinaria canadensis	Bloodroot
Tiarella cordifolia	Foamflower
Waldsteinia fragariodes	Barren Strawberry

B.9.2.4 Grasses

~~Big bluestem (*Andropogon gerardii*)~~

~~Switchgrass (*Panicum virgatum*)~~

~~Little bluestem (*Schizachyrium scoparium, syn. Andropogon scoparius*)~~

Botanical Name	**Common Name**
Andropogon gerardii	Big Bluestem
Panicum virgatum	Switchgrass
Schizachyrium scoparium, syn. Andropogon scoparius	Little Bluestem

B.9.3 Bioretention Plants

B.9.3.1 Deciduous Trees

Botanical Name	**Common Name**
Amelanchier canadensis	Shadblow Juneberry
Amelanchier Laevis	Allegheny ~~s~~Serviceberry
Betula nigra	River Birch
Carpinus caroliniana	American Hornbeam
Celtis occidentalis	Common Hackberry
Cercis canadensis	Eastern Red Bud
Fraxinus pennsylvanica	Green Ash
Liquidambar styracaflua	Sweet Gum Tree
Liriodendron tulipifera	Tulip Tree
Magnolia virginiana	Magnolia ~~v~~Virginiana
Nyssa sylvatica	Tupelo
Quercus bicolor	Swamp White Oak
Quercus palustris	Pin Oak

B.9.3.2 Evergreen Trees

Botanical Name	**Common Name**
Chamaecyparis thyoides	Atlantic White Cedar
Ilex opaca	American Holly
Juniperus virginiana	Eastern ~~red cedar~~Red Cedar

Formatted: Font: 11 pt
Formatted Table
Formatted: Font: 11 pt
Formatted: Font: 11 pt
Formatted: Font: 11 pt
Formatted: Font: 11 pt
Formatted: Font: 11 pt
Formatted: Font: 11 pt
Formatted: Font: 11 pt
Formatted: Font: 11 pt
Formatted: Font: 11 pt
Formatted: Font: 11 pt
Formatted: Font: 11 pt
Formatted: Font: 11 pt
Formatted: Font: 11 pt
Formatted: Font: 11 pt
Formatted: Font: 11 pt
Formatted Table
Formatted: Font: 11 pt
Formatted: Font: 11 pt
Formatted: Font: 11 pt

Thuja occidentalis var	Eastern ~~a~~Arborvitae

B.9.3.3 Shrubs

Botanical Name	**Common Name**
Aronia arbutifolia	Red ~~choke cherry~~Choke Cherry
Aronia melanocarpa	Black Chokeberry
Baccharis halimifolia	Groundsel
Calicarpa dichotoma	Purple ~~b~~Beautyberry
Cephalotaxus harringtonia	Plum Yew
Cephalanthus occidentalis	Buttonbush
Clethra alnifolia	White Summer Sweet
Comptonia peregrina	Sweet Fern
Cornus racemosa	Gray ~~d~~Dogwood
Cornus sericea	Bailey's ~~red twig dogwood~~Red Twig Dogwood
Ham~~m~~amelis virginiana	Common Witch Hazel
Hydrangea arborescens	Wild Hydrangea
Hypericum kalmianum	St. John's Wort
Hypericum patulum	St. John's Wort
Ilex glabra	Inkberry
Ilex glabra compacta	Compact ~~i~~Inkberry
Ilex verticillata	Winterberry
Itea virginica	Henry's Garnet
Kalmia latifolia	Mountain Laurel
Leucothoe fontanesiana	Drooping Leucothoe
Lindera benzoin	Spice Bush
Myrica pennsylvanica	Northern ~~b~~Bayberry
Rhododendron viscosum	Swamp Azalea
Rhus aromatica canadensis	Fragrant Sumac
Rhus aromatica gro-lo	Gro-Lo Fragrant ~~s~~Sumac
Rhus copallina	Shining Sumac
Rhus glabra	Sumac
Rhus typhina	Staghorn Sumac
~~*Rosa rugosa*~~	~~Beach Rose~~
Sambucus canadensis	American ~~e~~Elderberry
Vaccinium angustifolia	Low ~~b~~Bush Blueberry
Vaccinum corymbosum	Highbush ~~b~~Blueberry

Formatted ... [2]
Formatted ... [1]
Formatted ... [3]
Formatted Table ... [4]
Formatted ... [5]
Formatted ... [6]
Formatted ... [7]
Formatted ... [9]
Formatted ... [8]
Formatted ... [10]
Formatted ... [11]
Formatted ... [12]
Formatted ... [13]
Formatted ... [15]
Formatted ... [14]
Formatted ... [16]
Formatted ... [17]
Formatted ... [19]
Formatted ... [18]
Formatted ... [20]
Formatted ... [21]
Formatted ... [22]
Formatted ... [23]
Formatted ... [25]
Formatted ... [24]
Formatted ... [26]
Formatted ... [27]
Formatted ... [28]
Formatted ... [29]
Formatted ... [30]
Formatted ... [32]
Formatted ... [31]
Formatted ... [33]
Formatted ... [34]
Formatted ... [36]
Formatted ... [35]
Formatted ... [37]
Formatted ... [38]
Formatted ... [39]
Formatted ... [42]
Formatted ... [40]
Formatted Table ... [41]
Formatted ... [44]
Formatted ... [43]
Formatted ... [46]
Formatted ... [45]

Botanical Name	Common Name
Viburnum cassinoides	Wild Raisin
Viburnum dentatum	Arrowwood ~~v~~Viburnum
Viburnum dilatatum	Linden Viburnum
Viburnum trilobum	Highbush ~~c~~Cranberry

B.9.3.4 Ground Cover/Grasses/Perennials

Botanical Name	Common Name
Andropogon gerardii	Big Blue Stem
Arctostaphylos uva-ursi	Bearberry
Asclepias tuberosa	Butterfly ~~w~~Weed
Aster novae-angliae	New England Aster
Carex stricta	Tussock Sedge
Coreopsis species	Coreopsis
Coreopsis verticillata	Moonbeam Coreopsis
Dennstaedtia punctilobula	Hay Scented Fern
Eragrostis spectabilis	Purple Lovegrass
Eupatorium maculatum	Joe-~~pye~~Pye Weed
Hemerocallis spp.	Daylilies ~~Yellow~~
Hibiscus moscheutus	Swamp Rose Mallow
Iris versicolor	Blue Flag
Juncus effusus	Soft Rush
Oclemena acuminata	Wood Aster
Oenothera biennis	Evening Primrose
Panicum virgatum	Switch Grass
Pennisetum alopecuroides	Fountain Grass
Penstomon Prarie Dusk	Prairie Dusk Beards Tongue
Phlox stolonifera	Phlox White
Phlox stolonifera	Phlox Purple
Polystichum arcostinchoides	Christmas ~~dagger fern~~Dagger Fern
Rudbeckia hirta	Black Eyed Susan
Schizachyrium scoparium	Bluestem
Solidago sempervirens	Seaside Goldenrod
Solidago virgaurea	~~Golden rod~~Goldenrod

B.9.4 Open Channel Grasses

Formatted: Font: 11 pt
Formatted: Font: 11 pt
Formatted: Font: 11 pt
Formatted: Font: 11 pt
Formatted: Font: 11 pt
Formatted: Font: 11 pt
Formatted: Font: 11 pt
Formatted Table
Formatted: Font: 11 pt
Formatted: Font: 11 pt
Formatted: Font: 11 pt
Formatted: Font: 11 pt
Formatted: Font: 11 pt
Formatted: Font: 11 pt

Botanical Name	Common Name
Agrostis alba	Redtop
Agrostis palustris	Creeping Bentgrass
Bromus inermis	Smooth Brome
Buchloe dactyloides	Buffalo Grass
Cynodon dactylon	Bermuda Grass
Festuca arundinacea	Tall Fescue
Festuca rubra	Red Fescue
~~*Phalaris arundinacea*~~	~~Reed Canary grass~~
Poa pratensis	Kentucky Bluegrass

Formatted: Font: 11 pt
Formatted Table
Formatted: Font: 11 pt
Formatted: Font: 11 pt
Formatted: Font: 11 pt
Formatted: Font: 11 pt
Formatted: Font: 11 pt
Formatted: Font: 11 pt
Formatted: Font: 11 pt
Formatted Table

B.9.5 Stormwater Basins and WVTS Plant List

This section contains planting guidance for stormwater basins and WVTS. The following lists emphasize the use of plants native to southern New England and are intended as general guidance for planning purposes. Local landscape architects and nurseries may provide additional information, including plant availability, for specific applications.

Plantings for stormwater basins and WVTS should be selected to be compatible with the various hydrologic zones (NYDEC, 2001) within these treatment practices. The hydrologic zones reflect the degree and duration of inundation by water. Plants recommended for a particular zone can generally tolerate the hydrologic conditions that typically exist within that zone. Table B-6 summarizes recommended plantings (trees/shrubs and herbaceous plants) within each hydrologic zone. This list is not intended to be exhaustive, but includes a number of recommended native species that are generally available from commercial nurseries. Other plant species may be acceptable if they can be shown to be appropriate for the intended hydrologic zone.

Table B-6 Plant List for Stormwater Basins and WVTS

Hydrologic Zone	Zone Description	Plant Name and Form	
Zone 1 **Deep Water Pool**	• 1 to 6 feet deep, permanent pool • Submergent plants (if any at all) • Not routinely planted due to limited availability of plants that can survive in this zone and potential clogging of outlet structure • Plants reduce resuspension of sediments and improve oxidation/aquatic habitat	**Trees and Shrubs** Not recommended **Herbaceous Plants** Coontail (Ceratophyllum demersum) Duckweed (*Lemma sp*.) Pond Weed, Sago *(Potamogeton Pectinatus)* Waterweed (*Elodea canadensis*) Wild Celery (*Valisneria Americana)*	 Submergent Submergent/Emergent Submergent Submergent Submergent
Zone 2 **Shallow Water Bench**	• 1 foot below the normal pool (aquatic bench in stormwater basins) • Plants partially submerged • Emergent aquatic plants • Plants reduce resuspension of sediments, enhance pollutant removal, and provide aquatic and nonaquatic habitat	**Trees and Shrubs** Buttonbush *(Cephalanthus occidentalis)* **Herbaceous Plants** Arrow arum *(Peltandra virginica*) Arrowhead, Duck Potato *(Saggitaria latifolia)* Blue Flag Iris *(Iris versicolor)* Blue Joint (*Calamagrotis canadensis*) Broomsedge *(Andropogon virginicus)* Bushy Beardgrass *(Andropogon glomeratus)* Cattail *(Typha sp.)* Common Three-Square *(Scirpus pungens)* Duckweed *(Lemma sp.)* Hardstem Bulrush *(Scirpus acutus)* Giant Burreed *(Sparganium eurycarpum)* Lizard.s Tail *(Saururus cernuus)*	 Deciduous shrub Emergent Emergent Emergent Emergent Perimeter Emergent Emergent Emergent Submergent/Emergent Emergent Emergent Emergent

Hydrologic Zone	Zone Description	Plant Name and Form	
		Long-leaved Pond Weed *(Potamogeton nodosus)*	Rooted Submerged Aquatic
		Marsh Hibiscus *(Hibiscus moscheutos)*	Emergent
		Pickerelweed *(Pontederia cordata)*	Emergent
		Rice Cutgrass *(Leersia oryzoides)*	Emergent
		Sedges *(Carex spp.)*	Emergent
		Soft-stem Bulrush *(Scirpus validus)*	Emergent
		~~Smartweed *(Polygonum spp)*~~	Emergent
		Soft Rush *(Juncus effusus)*	Emergent
		Spatterdock *(Nuphar luteum)*	~~Emergent~~
		Switchgrass *(Panicum virgatum)*	Perimeter
		Sweet Flag *(Acorus calamus)*	Herbaceous
		Wild Rice *(Zizania aquatica)*	Emergent
		Wool Grass *(Scirpus cyperinus)*	Emergent
Zone 3 **Shoreline Fringe**	• 1 foot above the normal pool (includes safety bench of stormwater basin) • Frequently inundated if storm events are subject to extended detention • Plants must be able to withstand inundation during storms and occasional drought • Plants provide shoreline stabilization, shade the shoreline, enhance pollutant removal, and provide wildlife habitat (or selected to control overpopulation of waterfowl)	**Trees and Shrubs**	
		Arrowwood ~~Viburrium *(Viburrium)*~~Viburnum *(Viburnum dentatum)*	Deciduous shrub
		Bald Cypress *(Taxodium distichum)*	Deciduous tree
		Black Ash *(Fraxinus nigra)*	Deciduous tree
		Black Willow *(Salix nigra)*	Deciduous tree
		Blackgum *(Nyssa sylvatica)*	Deciduous shrub
		Buttonbush *(Cephalanthus occidentalis)*	Deciduous shrub
		Common Spice Bush *(Lindera benzoin)*	Deciduous shrub
		Elderberry *(Sambucus canadensis)*	Coniferous tree
		Larch, Tamarack *(Larix latricina)*	Deciduous tree
		Pin Oak *(Quercus palustris)*	Deciduous shrub
		Red Choke Berry *(Pyrus arbutifolia)*	Deciduous tree
		Red Maple *(Acer rubrum)*	Deciduous tree
		River Birch *(Betula nigra)*	Deciduous shrub
		Silky Dogwood *(Cornus amomium)*	Deciduous tree
		Slippery Elm *(Ulnus rubra)*	Deciduous tree
		Smooth Alder *(Alnus serrulata)*	Deciduous shrub
		Speckled Alder *(Alnus rugosa)*	Deciduous tree
		Swamp White Oak *(Quercus bicolor)*	Deciduous shrub
		Swamp Rose *(Rosa Palustrus)*	Deciduous ~~tree~~shrub
		~~Tupelo *(Nyssa sylvatica vari biflora)*~~	~~Deciduous shrub~~
		Winterberry *(Ilex verticillata)*	

Hydrologic Zone	Zone Description	Plant Name and Form	
		Herbaceous Plants	
		Arrow arum *(Peltandra virginica)*	Emergent
		Arrowhead, Duck Potato *(Saggitaria latifolia)*	Emergent
		Blue Flag Iris *(Iris versicolor)*	Emergent
		Blue Joint (*Calamagrotis canadensis*)	Emergent
		Blue Vervain (*Verbena hastata*)	Emergent
		Boneset (*Eupatorium perfoliatum*)	Emergent
		Broomsedge *(Andropogon virginicus)*	Perimeter
		Bushy Beardgrass *(Andropogon glomeratus)*	Emergent
		Cattail *(Typha sp.)*	Emergent
		Chufa (*Cyperus esculentus*)	Emergent
		Creeping Bentgrass (*Agrostis stolonifera*)	Emergent
		Creeping Red Fescue (*Festuca rubra*)	Emergent
		Flat-top Aster (*Aster umbellatus*)	Emergent
		Fowl Bluegrass (*Poa palustris*)	Emergent
		Giant Burreed *(Sparganium eurycarpum)*	Emergent
		Green Bulrush (*Scirpus atrovirens*)	Emergent
		Marsh Hibiscus *(Hibiscus moscheutos*)	Emergent
		Pickerelweed *(Pontederia cordata)*	Emergent
		Redtop (*Agrostis alba*)	Emergent
		Rice Cutgrass *(Leersia oryzoides)*	Emergent
		Sedges *(Carex spp)*	Emergent
		Tufted Hairgrass (*Deschampsia caespitosa*)	Emergent
		Soft-stem Bulrush *(Scirpus validus)*	Emergent
		~~Smartweed *(Polygonum spp.)*~~	Perimeter
		Soft Rush *(Juncus effusus)*	Emergent
		Spotted Joe-pye weed (*Eupatorium maculatum*)	Emergent
		Swamp Aster (*Aster puniceus*)	Emergent
		Switchgrass *(Panicum virgatum)*	Emergent
		Sweet Flag *(Acorus calamus)*	Emergent
		Water Plantain (*Alisma plantago-aquatica*)	Emergent
		Wild-rye (*Elymus spp.*)	Emergent
		Wool Grass *(Scirpus cyperinus)*	Emergent

Formatted: Font: 12 pt

Hydrologic Zone	Zone Description	Plant Name and Form	
Zone 4 **Riparian Fringe**	• 1 to 4 feet above the normal pool • Includes nearly all of temporary extended detention volume • Periodically inundated after storms • Plants must be able to withstand inundation during storms and occasional drought • Plants provide shoreline stabilization, shade the shoreline, enhance pollutant removal, and provide wildlife habitat (or selected to control overpopulation of waterfowl)	**Trees and Shrubs**	
		American Elm *(Ulmus americana)*	Deciduous tree
		Arrowwood ~~Viburrium (Viburrium~~Viburnum *(Viburnum* dentatum)	Deciduous shrub
		Bald Cypress *(Taxodium distichum)*	Deciduous tree
		Bayberry *(Myrica pensylvanica)*	Deciduous shrub
		Black Ash *(Fraxinus nigra)*	Deciduous tree
		Blackgum ~~or Sourgum~~ *(Nyssa sylvatica)*	Deciduous tree
		Black Willow *(Salix nigra)*	Deciduous tree
		Buttonbush *(Cephalanthus occidentalis)*	Deciduous shrub
		Common Spice Bush *(Lindera benzoin)*	Deciduous shrub
		Eastern Cottonwood *(Populus deltoides)*	Deciduous tree
		Eastern Red Cedar *(Juniperus virginiana)*	Coniferous tree
		Elderberry *(Sambucus canadensis)*	Deciduous shrub
		Green Ash, Red Ash *(Fraxinus pennsylvania)*	Deciduous tree
		Larch, Tamarack *(Larix latricina)*	Coniferous tree
		Pin Oak *(Quercus palustris)*	Deciduous tree
		Red Choke Berry *(Pyrus arbutifolia)*	Deciduous shrub
		Red Maple *(Acer rubrum)*	Deciduous tree
		River Birch *(Betula nigra)*	Deciduous tree
		Shadowbush, Serviceberry *(Amelanchier ~~C~~canadensis)*	Deciduous shrub
		Silky Dogwood *(Cornus amomium)*	Deciduous shrub
		Slippery Elm *(Ulnus rubra)*	Deciduous tree
		Smooth Alder *(Alnus serrulata)*	Deciduous tree
		Speckled Alder *(Alnus rugosa)*	Deciduous shrub
		Swamp White Oak *(Quercus bicolor)*	Deciduous tree
		Swamp Rose *(Rosa ~~P~~palustrus)*	Deciduous tree
		Sweetgum *(Liquidambar styraciflua)*	Deciduous tree
		Sycamore *(Platanus occidentalis)*	Deciduous tree
		Tulip Tree *(Liriodendron tulipifera)*	Deciduous ~~tree~~
		~~Tupelo (Nyssa sylvatica vari biflora)~~	~~Deciduous~~ shrub Deciduous shrub

Formatted: Font: 4 pt

Formatted: Space Before: 12 pt, After: 3 pt

Formatted: Font: 1 pt

Hydrologic Zone	Zone Description	Plant Name and Form	
		Winterberry *(Ilex verticillata)* Witch Hazel *(Hamamelis virginiana)*	
		Herbaceous Plants	
		Big Bluestem (*Andropogon gerardi)* Birdfoot deervetch (*Lotus ~~C~~corniculatus*) Blue Vervain (*Verbena hastata*) Boneset (*Eupatorium perfoliatum*) Blue Joint (*Calamagrotis canadensis*) Cardinal flower (*Lobelia cardinalis*) ~~Chufa (*Cyperus esculentus*)~~ Fowl Bluegrass (*Poa palustris*) Fowl mannagrass (*Glyceria striata*) Green Bulrush (*Scirpus atrovirens*) Redtop (*Agrostis alba*) Tufted Hairgrass (*Deschampsia caespitosa*) Sedges *(Carex spp)* ~~Smartweed (*Polygonum spp.*)~~ Soft Rush *(Juncus effusus)* Spotted Joe-pye weed (*Eupatorium maculatum*) Swamp Aster (*Aster puniceus*) Switchgrass *(Panicum virgatum)* Water Plantain (*Alisma plantago-aquatica*) Wild-rye (*Elymus spp.*) ~~Water Plantain (*Alisma plantago-aquatica*)~~ ~~Wild-rye (*Elymus spp.*)~~	Perimeter Perimeter Emergent Emergent Emergent Perimeter Emergent ~~Emergent~~ Perimeter Emergent Perimeter Perimeter Emergent Emergent Emergent Emergent ~~Emergent~~ Perimeter Emergent Emergent ~~Emergent~~ ~~Emergent~~
Zone 5 **Floodplain Terrace**	• Extends from the maximum channel protection water surface elevation to the 100-year water surface elevation • Infrequently inundated • Plants must be able to withstand occasional,	**Trees and Shrubs** American Elm *(Ulmus americana)* Bayberry *(Myrica pensylvanica)*	 Deciduous tree Deciduous shrub

Formatted: Don't adjust space between Latin and Asian text, Don't adjust space between Asian text and numbers

Hydrologic Zone	Zone Description	Plant Name and Form	
	brief inundation and occasional drought conditions • Plants provide slope stabilization, shade, and wildlife habitat	Black Ash *(Fraxinus nigra)*	Deciduous tree
		Black Cherry *(Prunus serotina)*	Deciduous tree
		Blackgum ~~or Sourgum~~ *(Nyssa sylvatica)*	Deciduous tree
		Black Willow *(Salix nigra)*	Deciduous tree
		Buttonbush *(Cephalanthus occidentalis)*	Deciduous shrub
		Common ~~Spice Bush~~Spicebush *(Lindera benzoin)*	Deciduous shrub
		Eastern Cottonwood *(Populus deltoides)*	Deciduous tree
		Eastern Hemlock *(Tsuga canadensis)*	Coniferous tree
		Eastern Red Cedar *(Juniperus virginiana)*	Coniferous tree
		Elderberry *(Sambucus canadensis)*	Deciduous shrub
		Green Ash, Red Ash *(Fraxinus pennsylvania)*	Deciduous tree
		Hack~~en~~berry *(Celtis occidentalis)*	Deciduous tree
		Pin Oak *(Quercus palustris)*	Deciduous tree
		Red Choke Berry *(Pyrus arbutifolia)*	Deciduous shrub
		Red Maple *(Acer rubrum)*	Deciduous tree
		River Birch *(Betula nigra)*	Deciduous tree
		Shadowbush, Serviceberry *(Amelanchier canadensis)*	Deciduous shrub
		Silky Dogwood *(Cornus amomium)*	Deciduous shrub
		Slippery Elm *(Ulnus rubra)*	Deciduous tree
		Smooth Alder *(Alnus serrulata)*	Deciduous tree
		Swamp White Oak *(Quercus bicolor)*	Deciduous tree
		Sweetgum *(Liquidambar styraciflua)*	Deciduous tree
		Sycamore *(Platanus occidentalis)*	Deciduous tree
		Tulip Tree *(Liriodendron tulipifera)*	Deciduous tree
		~~Tupelo *(Nyssa sylvatica vari biflora)*~~	Deciduous tree
		White Ash *(Fraxinus americana)*	~~Deciduous tree~~
		Winterberry *(Ilex verticillata)*	Deciduous shrub
		Witch Hazel *(Hamamelis virginiana)*	Deciduous shrub
		Herbaceous Plants	
		Annual Ryegrass (*Lolium multiflorum*)	
		Big Bluestem (*Andropogon gerardi*)	Perimeter
		~~Birdfoot deervetch (*Lotus Corniculatus*)~~	Perimeter
		Cardinal flower (*Lobelia cardinalis*)	Perimeter
		Creeping Red Fescue (*Festuca rubra*)	Perimeter
		Fowl mannagrass (*Glyceria striata*)	Perimeter

Formatted: Space Before: 12 pt, After: 3 pt

Hydrologic Zone	Zone Description	Plant Name and Form	
		Redtop (*Agrostis alba*)	Perimeter
		Timothy (*Phleum pratense*)	Perimeter
		Tufted Hairgrass (*Deschampsia caespitosa*)	Perimeter
		White Clover (*Trifolium repens*)	Perimeter
		Switchgrass *(Panicum virgatum)*	Perimeter
			~~Perimeter~~
Zone 6 **Upland Slopes**	• Above the maximum 100-year water surface elev. • Typically includes setback of basin or WVTS • Plants should be selected based on soil condition, light, and function (not inundation since almost never inundated)	**Trees and Shrubs**	
		American Elm *(Ulmus americana)*	Deciduous tree
		Bayberry *(Myrica pensylvanica)*	Deciduous shrub
		Black Cherry *(Prunus serotina)*	Deciduous tree
		Blackgum ~~or Sourgum~~ *(Nyssa sylvatica)*	Deciduous tree
		Eastern Hemlock *(Tsuga Canadensis)*	Coniferous tree
		Eastern Red Cedar *(Juniperus virginiana)*	Coniferous tree
		Elderberry *(Sambucus canadensis)*	Deciduous shrub
		Hackenberry *(Celtis occidentalis)*	Deciduous tree
		Pin Oak *(Quercus palustris)*	Deciduous tree
		Red Maple *(Acer rubrum)*	Deciduous tree
		Shadowbush, Serviceberry *(Amelanchier canadensis)*	Deciduous shrub
		Sweetgum *(Liquidambar styraciflua)*	Deciduous tree
		Sycamore *(Platanus occidentalis)*	Deciduous tree
		Tulip Tree *(Liriodendron tulipifera)*	Deciduous tree
		White Ash *(Fraxinus Americana)*	Deciduous tree
		Herbaceous Plants	
		~~Birdfoot deervetch (*Lotus Corniculatus*)~~	Perimeter
		Cardinal flower (*Lobelia cardinalis*)	Perimeter
		Switchgrass *(Panicum virgatum)*	~~Perimeter~~

Source: Adapted from NYDEC, 2001; New England Wetland Plants, Inc

<Page left blank intentionally>

APPENDIX C: GUIDANCE FOR RETROFITTING EXISTING DEVELOPMENT FOR STORMWATER MANAGEMENT

This appendix presents a broad overview of guidance on retrofitting existing development to provide stormwater management for a range of development and watershed scales. This guidance is adapted from the Center for Watershed Protection's Urban Stormwater Retrofit Manual (2007). The guidance and information presented will most likely be useful for applicants for redevelopment, or where retrofitting is required to meet a TMDL. In general, this guidance should not be viewed as a regulatory mandate and should not relieve readers from practicing sound engineering judgment in the selection and design of appropriate BMPs.

C.1 INTRODUCTION

Ideally, as land is developed, structural controls are implemented to control present and future stormwater runoff impacts. However, controlling stormwater from new development alone will not solve existing problems. Retrofitting by definition is the process by which structural controls are constructed to serve and reduce the water quantity and quality impacts from *existing* developed areas; the retrofits described in this appendix can also be helpful for meeting Minimum Standard 6 for existing sites that are redeveloped, particularly for sites with more than 40% impervious cover and where off-site BMPs are needed. The objective of stormwater retrofitting is to remedy problems associated with, and to improve water quality mitigation functions of, older, poorly designed, or poorly maintained, stormwater management systems. In Rhode Island, prior to the 1970s, site drainage design did not require stormwater detention for controlling post-development peak flows. As a result, drainage, flooding, and erosion problems are common in many older developed areas of the State. Furthermore, a majority of the stormwater detention facilities throughout the State have been designed to control peak flows, without regard for water quality mitigation. Therefore, many existing stormwater detention basins provide only minimal water quality benefit.

Due to the fact that they are intended to serve existing problem areas, retrofits are typically the responsibility of the local government who must mitigate property flooding, reduce streambank erosion, or comply with TMDL or other water quality regulatory requirements. This can be accomplished through reduction in unnecessary impervious cover, incorporation of small-scale LID management practices, and construction of new or improved structural stormwater treatment practices. One of the primary benefits of stormwater retrofits is the opportunity to combine stormwater quantity and quality controls. Stormwater retrofits can also remedy local nuisance conditions and maintenance problems in older areas and improve the appearance of existing facilities through landscape amenities and additional vegetation.

Retrofits must be integrated with existing and often diverse urban development, and they assume a wider range of forms than structural controls installed during new

Formatted: Indent: Left: 0", Hanging: 1.63"

Formatted Table

Formatted: Font: 10 pt

development. Space constraints, construction costs, acquisition of easements, safety precautions, economic vitality, and property rights all compete with the need to reduce ~~nutrient~~pollutant loadings in the urban environment.~~ This guidance has been adapted from the Center for Watershed Protection Urban Stormwater Retrofit Practices Manual (2007).~~

C.2 Stormwater Retrofitting Process

Stormwater retrofitting is ideally performed as a part of an overall watershed planning and implementation effort. When applied along with other available water restoration strategies such as pollutant reduction, habitat restoration, and morphologic stabilization, retrofitting can be most effective. The following eight steps detail a "how-to" approach to retrofitting.

Step 1: Watershed Retrofit Inventory

The first step to putting a retrofit in place is locating and identifying where it is feasible and appropriate to put a proposed facility. This involves a process of identifying as many potential sites as possible. The best retrofit sites fit easily into the existing landscape, are located at or near major drainage or stormwater control facilities, and are easily accessible. Usually the first step is completed in the office using available topographic mapping, low altitude aerial photographs (where available), storm drain master plans, utility maps, and land use maps (zoning or tax maps are generally acceptable).

Before venturing into the field, there are two tasks that should be performed. First, the drainage areas should be delineated, and second, the potential surface area of the facility measured. The drainage area is used to compute a capture ratio. This is the percentage of the overall watershed that is being managed by the retrofit project(s). The surface area is used to compute a preliminary storage volume of the proposed facility. This information can be used as a quick screening tool. In general, an effective retrofitting strategy must capture at least 50% of the watershed, and the minimum target storage volume for each retrofit is approximately 0.5 inch per impervious acre. However for impaired receiving waters and/or those where watershed plans including Special Area Management Plans (SAMPs) or Total Maximum Daily Load (TMDLs) have been completed, capture of a higher percentage of the watershed and/or treatment of the water quality volume (1") may be necessary to achieve the specified pollutant reduction targets.

For the ~~(City/Town~~ city/town-owned roadways within the catchment area or entire catchment area including privately owned parcels~~),~~, map and characterize existing conditions including:

- Elevations and contours (scale to be specified by ~~City/Town~~city/town), including severe slopes;
- Existing drainage patterns;
- Existing stormwater structures (e.g., catch basin type, pipe size and material type~~)~~); and

Formatted Table

Formatted: Font: 10 pt

- Interconnections with private or other publicly owned stormwater systems

Utilizing readily available information and preliminary screening-level field investigations, map and analyze environmental features and siting constraints including:

- Soil types (including Hydrologic group~~)~~);
- Infiltration rates;
- Depth to groundwater (based on soils data and other readily available information~~)~~);
- Surface waters;
- Wetlands or other sensitive resources;
- Rock outcroppings or shallow bedrock;
- Buried utilities;
- Public ~~W~~wells within 400 ft of proposed BMP site(s~~)~~);
- Private wells within 100 ft of the proposed BMP site(s);
- On-site septic systems within 100 ft of proposed BMP site(s~~)~~);
- Associated rights of way, easements and adjacent publicly owned and other potentially available undeveloped properties in vicinity of existing stormwater infrastructure;
- Description of downstream reach (channel and riparian area) impacted by stormwater outfall(s), including the condition of receiving waters; and
- Construction and maintenance access opportunities.

Step 2: Field Verification of Candidate Sites

Candidate retrofit sites from Step 1 are field investigated to verify that they are indeed feasible candidate sites. This field investigation involves a careful assessment of site specific information such as:

- Presence of sensitive environmental features
- Location of existing utilities (including public wells~~ and, if location known~~, private wells, and OWTSs~~)~~ within any critical setback distances established in these standards or other applicable regulation)
- Type of adjacent land uses
- Condition of receiving waters
- Construction and maintenance access opportunities, and most importantly,
- Evaluation of retrofit suitability

Usually a conceptual sketch is prepared and photographs are taken. During field verification, utilities should be located and an assessment made as to potential conflicts. Avoidance should be stressed due to cost considerations. It may also be ~~appropriate~~necessary to contact the appropriate utility to verify field observations and to discuss the potential facility. This may alleviate potential conflicts later.

Formatted Table

Formatted: Font: 10 pt

Existing natural resources such as wetlands, streams, and forests should be evaluated as to their sensitivity. Generally, placement of stormwater retention and detention facilities within wetlands and streams is prohibited and must be avoided. While placement of such structures in upland buffers may be acceptable, avoidance and/or minimization of impacts to these resources should be considered where feasible. Finally, identify, review, and assess adjacent land uses for consideration of structural controls that are compatible with nearby properties.

Formatted: Keep with next, Keep lines together

Step 3: Prioritize Sites for Implementation

Once sites have been located and determined to be feasible and practical, the next step is to set up a plan for future implementation. It is prudent to have an implementation strategy based on a predetermined set of objectives. For example, in some watersheds, implementation may be based on a strategy of reducing pollutant loads to receiving waters where the priority of retrofitting might be to go after the highest polluting land uses first. Whereas if the strategy is oriented more towards restoring stream channel morphology, priority retrofits are targeted to capture the largest drainage areas and provide the most storage. Whatever the restoration focus, it is useful to provide a scoring system that can be used to rank each retrofit site based on a uniform criteria. A typical scoring system might include a score for the following items:

- Pollutant removal capability;
- Stream channel protection capability;
- Flood protection control capability;
- Cost of facility (design, construction and maintenance costs~~)~~);
- Ability to implement the project (land ownership, construction access, permits~~)~~); and
- Potential for public benefit (education, location within a priority watershed, visible amenity, supports other public involvement initiatives~~)~~).

Step 4: Public Involvement Process

This aspect of the process is critical if a project is to be constructed. A successful project must involve the immediate neighbors who will be affected by the changed conditions. Nearly all retrofits require modifications to the existing environment. A dry detention pond may be a very desirable area for some residents in the community. It is a community space and only rarely is there any water in the pond. A stormwater pond or WVTS retrofit, on the other hand, may have large expanses of water and may have highly variable water fluctuations. Adjacent owners may resist these changes. In order to gain citizen acceptance of retrofits, they must be involved in the process from the start and throughout the planning, design and implementation process. Citizens who are informed about the need for, and benefits of, retrofitting are more likely to accept projects.

Formatted: Space After: 0 pt

Still, some citizens and citizen organizations will never support a particular project. This is why it is mandatory that there be an overall planning process which identifies projects early in the selection process and allows citizen input before costly field surveys and

Formatted Table

Formatted: Font: 10 pt

engineering designs are performed. Project sites and retrofit techniques that simply cannot satisfy citizen concerns may need to be dropped from further consideration.

A good retrofit program must also incorporate a good public relations plan. Slide shows or field trips to existing projects can be powerful persuasions to skeptical citizens. Every site that goes forward to final design and permitting should be presented at least once to the public through a public hearing or "town hall" type meeting.

Formatted: No widow/orphan control

Step 5: Retrofit Design

In the design process, the concept is converted to an engineering design and construction plan. Design of retrofit projects should incorporate the same elements as any other structural control design including, but not limited to:

Formatted: Space After: 0 pt

- Adequate hydrologic and hydraulic modeling;
- Detailed topographic mapping;
- Property line establishment;
- Site grading;
- Structural design;
- Geotechnical investigations;
- Erosion and sediment control design; and
- Construction phasing and staging.

Formatted: Space After: 0 pt

Normal structural control design usually follows prescribed design criteria (i.e., control of the 100-year storm or sizing for the water quality volume). Retrofit designers must work backwards from a set of existing site constraints to arrive at an obtainable, yet acceptable, stormwater control ~~obtainable~~. This process may yield facilities that are too small or ineffective, and therefore not practical for further consideration. Designers should look for opportunities to combine projects, such as stream stabilization or habitat restoration with the retrofit in a complementary manner.

The key to successful retrofit design is the ability to balance the desire to maximize pollutant removal, channel erosion protection and flood control while limiting the impacts to adjacent infrastructure, residents or other properties. Designers must consider issues like avoiding relocations of existing utilities, minimizing existing wetland and forest impacts, maintaining existing floodplain elevations, complying with dam safety and dam hazard classification criteria, avoiding maintenance nuisance situations, and providing adequate construction and maintenance access to the site.

Formatted: Space After: 0 pt

Retrofits can vary widely as to cost from a few thousand dollars to several hundred thousand dollars. A preliminary cost estimate should be a part of the design phase.

Formatted: No widow/orphan control

Step 6: Permitting

Perhaps the most difficult permitting issues for retrofit projects involve impacts to wetlands, forests, and floodplain alterations. Many of these impacts are either

Formatted Table

Formatted: Font: 10 pt

unavoidable or necessary to achieve reasonable storage targets. The primary goal that permitting agencies strive for is to have structural BMPs located outside regulated wetlands and buffers. Lacking alternative locations, placement of such structures in the upland buffer areas (e.g., perimeter or riverbank wetland under DEM regulations) may be acceptable provided associated impacts are reduced to the maximum extent practicable. Placement of structural BMPs within streams, rivers, or biological wetland areas is not appropriate in most instances. Permitting agencies will need a thorough explanation of the alternatives considered that could otherwise reduce impacts, why they are not feasible, and a clear demonstration that the project will result in significant improvement in water quality without significant adverse impact to floodplain, wetland habitat, and recreational environment. In some instances, mitigation may also be required in order to satisfy permitting. If so, additional costs may be involved.

Step 7: Construction and Inspections

Like any design project, proper construction, inspection, and administration are integral to a successful facility. Retrofitting often involves construction of unique or unusual elements, such as flow splitters, underground sand filters, or stream diversions. Many of these practices may be unfamiliar to many contractors. Most publicly funded projects are awarded to the low bidder who may be qualified to do the work, but may never have constructed projects of this nature. Therefore, it is almost a necessity to retain the retrofit designer of record or other qualified professional to answer contractor questions, approve shop drawings, conduct regular inspections, hold regular progress meetings, conduct construction testing, and maintain construction records. ~~Record~~As-built drawings should also be a part of the construction process. These drawings are used for maintenance purposes.

Step 8: Maintenance Plan

Always the last element and often the least practiced component of a stormwater management program, maintenance is doubly important in retrofit situations. The reasons are simple: most retrofits are undersized when compared to their new development counterparts, and space is at a premium in urban areas where many maintenance provisions such as access roads, stockpiling, or staging areas are either absent or woefully undersized. Maintenance is vital to ensure that a retrofit functions properly for as long as possible. Appendix E offers more guidance on developing maintenance plans.

C.3 Types of Retrofitting Techniques

Retrofitting techniques can be applied to many different situations depending on the end result required and space available. Retrofitting techniques include:

- Source Retrofit – Use of techniques that attenuate runoff and/or pollutant generation before it enters a storm drain system, i.e., reducing impervious areas, using pollution prevention practices, etc. These are used in areas where build-out prevents the establishment of a significant number of new

Formatted: Space After: 0 pt

Formatted Table

Formatted: Font: 10 pt

facilities, and where redevelopment will not have a significant impact on water quality.

- Redevelopment – Redevelopment will result in retrofit by means of new structural control facilities required by the stormwater management standards in Chapter Three. Projected redevelopment trends, while not within the direct control of local government, are useful in predicting areas of existing development that may be mitigated in the future.

- Existing Structural Control Retrofit – The retrofit of an existing structural control to improve its pollutant removal efficiency or storage capacity, or both.

- Installation of Additional Stormwater Controls – Additional stormwater controls can be added for existing development or redevelopment. Consideration should be given to regional controls, rather than site-specific applications.

- Conversion of Existing Stormwater Facilities to Water Quality Functions – Existing flood control facilities built to serve previous development may be modified to act as a water quality structural control on a regional or site-specific basis.

- Open Channel Retrofit – Open channel retrofits are constructed within an open channel below a storm drain outfall.

- Off-line Retrofit – Involves the use of a flow-splitter to divert the first flush of runoff to a lower open area for treatment in areas where land constraints are not present.

- In-line Retrofit – Used where space constraints do not allow the use of diversions to treatment areas.

C.4 When is Retrofitting Appropriate?

Site constraints commonly encountered in existing, developed areas can limit the type of stormwater retrofits that are possible for a site and their overall effectiveness. Retrofit of an existing stormwater management facility according to the minimum standards contained in Chapter Three of this manual may not be possible due to site-specific factors such as the location of existing utilities, buildings, wetlands, maintenance access, and adjacent land uses. Table C-1 lists site-specific factors to consider in determining the appropriateness of stormwater retrofits for a particular site.

Formatted Table

Formatted: Font: 10 pt

Table C-1 Site Considerations for Determining the Appropriateness of Stormwater Retrofits

Factor	Consideration
Retrofit Purpose	What are the primary and secondary (if any) purposes of the retrofit project? Are the retrofits designed primarily for stormwater quantity control, quality control, or a combination of both?
Construction/ Maintenance Access	Does the site have adequate construction and maintenance access and sufficient construction staging area? Are maintenance responsibilities for the retrofits clearly defined?
Subsurface Conditions	Are the subsurface conditions at the site (soil permeability and depth to groundwater/bedrock) consistent with the proposed retrofit regarding subsurface infiltration capacity and constructability?
Utilities	Do the locations of existing utilities present conflicts with the proposed retrofits or require relocation or design modifications?
Conflicting Land Uses	Are the retrofits compatible with adjacent land uses of nearby properties?
Wetlands, Sensitive Water Bodies, and Vegetation	How do the retrofits affect adjacent or downgradient wetlands, sensitive receiving waters, and vegetation? Do the retrofits minimize or mitigate impacts where possible?
Complementary Restoration Projects	Are there opportunities to combine stormwater retrofits with complementary projects such as stream stabilization, habitat restoration, or wetland restoration/mitigation?
Permits and Approvals	Which local, state, and federal regulatory agencies have jurisdiction over the proposed retrofit project, and can regulatory approvals be obtained for the retrofits?
Public Safety	Does the retrofit increase the risk to public health and safety?
Cost	What are the capital and long-term maintenance costs associated with the stormwater retrofits? Are the retrofits cost-effective in terms of anticipated benefits?

Source: Adapted from Claytor, Center for Watershed Protection, 2000.

Retrofitted facilities may not be as effective in reducing pollutant loads as newly designed and installed facilities. However, in most cases, some improvements in stormwater quantity and quality control are possible, especially if a new use is planned for an existing development, or an existing storm drainage system is upgraded or

Formatted: Keep with next, Keep lines together
Formatted Table
Formatted: Keep with next, Keep lines together
Formatted: Font: 11.5 pt
Formatted: Font: 11.5 pt
Formatted: Font: 11.5 pt
Formatted: Font: 11.5 pt
Formatted: Font: 11.5 pt
Formatted: Font: 11.5 pt
Formatted: Font: 11.5 pt
Formatted: Font: 11.5 pt
Formatted: Font: 11.5 pt
Formatted: Font: 11.5 pt
Formatted Table
Formatted: Font: 10 pt

expanded. Incorporation of a number of small-scale LID management practices or a treatment train approach may be necessary to achieve the desired level of effectiveness. It should also be recognized that stormwater quantity frequently creates the most severe impacts to receiving waters and wetlands as a result of channel erosion (Claytor, Center for Watershed Protection, 2000). Therefore, stormwater quantity control functions that existing stormwater management facilities provide should not be significantly compromised in exchange for pollutant removal effectiveness.

C.5 Stormwater Retrofit Options

Stormwater retrofit options include many of the source control and stormwater treatment practices for new developments that are described in other chapters of this manual. Common stormwater retrofit applications for existing development and redevelopment projects fall into one of two categories: subwatershed and on-site retrofits.

Subwatershed Retrofits

- Stormwater management facility retrofits (add storage to existing ponds~~).~~);
- New stormwater controls at storm drain outfalls~~.~~[2][3]~~.~~,
- New stormwater controls for road culverts and rights-of-way~~.~~;
- Parking lots; and
- Practices in existing conveyance channels.

On-site Retrofits

- LUHPPL operations;
- Small parking lot retrofits;
- ~~Individual streets~~
- Individual rooftops;
- Individual streets;
- Little retrofits – Medians and Under-utilized Landscape Areas (i.e., MULes~~)~~);
- Hardscapes/Plazas; and

[2] ~~DEM prefers that retrofits to existing storm drainage systems be located in the upland area rights-of-way or vacant parcels as opposed to end-of-pipe. In doing so, it is possible to minimize disturbance of jurisdictional wetland areas, stormwater is treated closer to the source, and rather than siting one large BMP, multiple smaller BMPs are constructed. However, in some cases, the only retrofit options available are at the existing storm drain outfalls. In these cases, end-of-pipe retrofits should be limited to areas that are regulated as upland, upland buffer (perimeter or riverbank wetland under DEM regulations), area subject to storm flowage, and/or floodplain. Generally, placement of stormwater retention and detention facilities within wetlands and streams is prohibited and must be avoided.~~

[3] DEM prefers that retrofits to existing storm drainage systems be located in the upland area rights-of-way or vacant parcels as opposed to end-of-pipe. In doing so, it is possible to minimize disturbance of jurisdictional wetland areas, stormwater is treated closer to the source, and rather than siting one large BMP, multiple smaller BMPs are constructed. However, in some cases, the only retrofit options available are at the existing storm drain outfalls. In these cases, end-of-pipe retrofits should be limited to areas that are regulated as upland, upland buffer (perimeter or riverbank wetland under DEM regulations), area subject to storm flowage, and/or floodplain. Generally, placement of stormwater retention and detention facilities within wetlands and streams is prohibited and must be avoided.

Formatted Table

Formatted: Font: 10 pt

- Underground.

Examples of these stormwater retrofits are described in the following sections.

C.6 Subwatershed Retrofits

C.6.1 Existing Stormwater Management Facilities

Existing stormwater management facilities originally designed for flood control can be modified or reconfigured for water quality mitigation purposes or increased hydrologic benefit. Older detention facilities offer the greatest opportunity for this type of retrofit. Traditional dry detention basins can be modified to become extended detention basins, wet ponds, or WVTSs for enhanced pollutant removal. This is one of the most common and easily implemented retrofits since it typically requires little or no additional land area, utilizes an existing facility for which there is already some resident acceptance of stormwater management, and involves minimal impacts to environmental resources (Claytor, Center for Watershed Protection, 2000).

Specific modifications to existing detention basins for improved water quality mitigation are summarized in Table C-2. Stormwater detention basin retrofits should include an evaluation of the hydraulic characteristics and storage capacity of the basin to determine whether available storage exists for additional water quality treatment. A typical retrofit of an existing detention basin is shown in Figure C-1.

Table C-2 Detention Basin Retrofits for Improved Water Quality Mitigation

Retrofit	Retrofit
Excavate the basin bottom to create more permanent pool storage	Eliminate low-flow bypasses
Raise the basin embankment to obtain additional storage for extended detention	Incorporate stilling basins at inlets and outlets and sediment forebays at basin inlets
Modify the outfall structure to create a two-stage release to better control small storms while not significantly compromising flood control detention for large storms	Regrade the basin bottom to create a wet area near the basin outlet or revegetate parts of the basin bottom with emergent vegetation to enhance pollutant removal, reduce mowing, and improve aesthetics
Increase the flow path from inflow to outflow and eliminate short-circuiting by using baffles, earthen berms, or micro-pond topography to increase residence time of water in the pond and improve	Create a shelf along the perimeter of a wet basin to improve shoreline stabilization, enhance pollutant filtering, and enhance aesthetic and habitat functions

Formatted Table

Formatted: Font: 10 pt

Retrofit	**Retrofit**
settling of solids	
Replace paved low-flow channels with meandering vegetated swales.	Create a low-maintenance "no-mow" wildflower ecosystem in the drier portions of the basin
Provide a high flow bypass to avoid resuspension of captured sediment/pollutants during high flows	

Source: Adapted from Claytor, Center for Watershed Protection, 2000; Pennsylvania Association of Conservation Districts et al., 1998; and NJDEP, 2000.

Figure C-1 Retrofit of an Existing Detention Basin (A) to a Shallow WVTS (B) (Adapted from CWP, 2007)

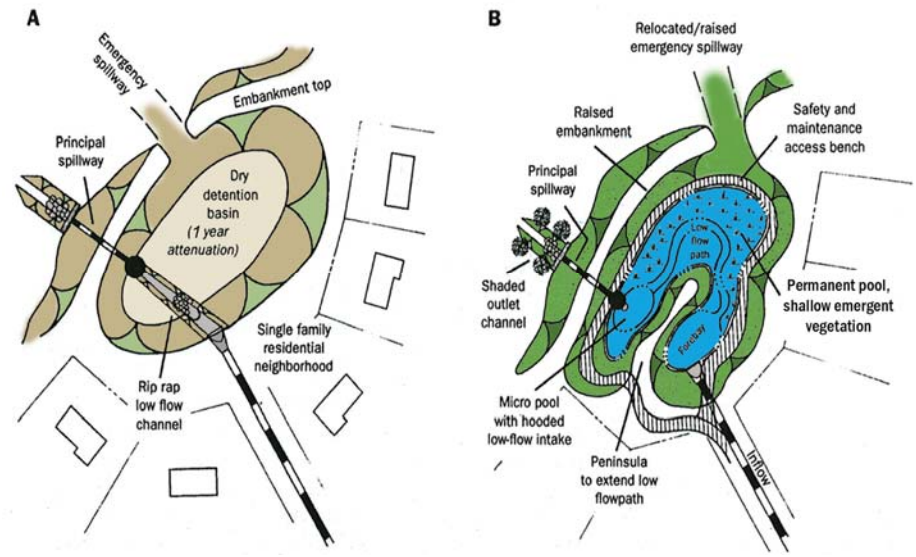

C.6.2 Storm Drain Outfalls

~~DEM prefers~~The permitting agencies prefer that retrofits to existing storm drainage systems be located in the upland area rights-of-way or vacant parcels as opposed to end-of-pipe. In doing so, it is possible to minimize disturbance of jurisdictional wetland areas, stormwater is treated closer to the source, and rather than siting one large BMP, multiple smaller BMPs are constructed. However, in some cases, the only retrofit options available are at the existing storm drain outfalls. In these cases, end-of-pipe retrofits should be limited to areas that are regulated as upland, upland buffer (perimeter or riverbank wetland under ~~RI~~DEM regulations), area subject to storm flowage, and/or

Formatted Table

Formatted: Font: 10 pt

floodplain. Generally, placement of stormwater retention and detention facilities within wetlands and streams is prohibited and must be avoided.

The retrofit stormwater treatment practices at storm drain outfalls are commonly designed as off-line devices to treat the water quality volume and bypass larger storms. Water quality swales, bioretention, sand filters, WVTSs, and wet ponds are commonly used for this type of retrofit, although most stormwater treatment practices can be used ~~for this type of retrofit~~ given enough space for construction and maintenance. Figure C-2 shows a schematic of an existing outfall retrofitted with an off-line bioretention area. Manufactured, underground infiltration chambers such as those described in Chapter Five are also commonly installed as off-line retrofits at or upgradient of stormwater outfalls. Velocity dissipation devices such as plunge pools and level spreaders can also be incorporated into the retrofit design.

Formatted: Highlight

Figure C-2 Schematic of Existing Outfall Retrofit (Adapted from CWP, 2007)

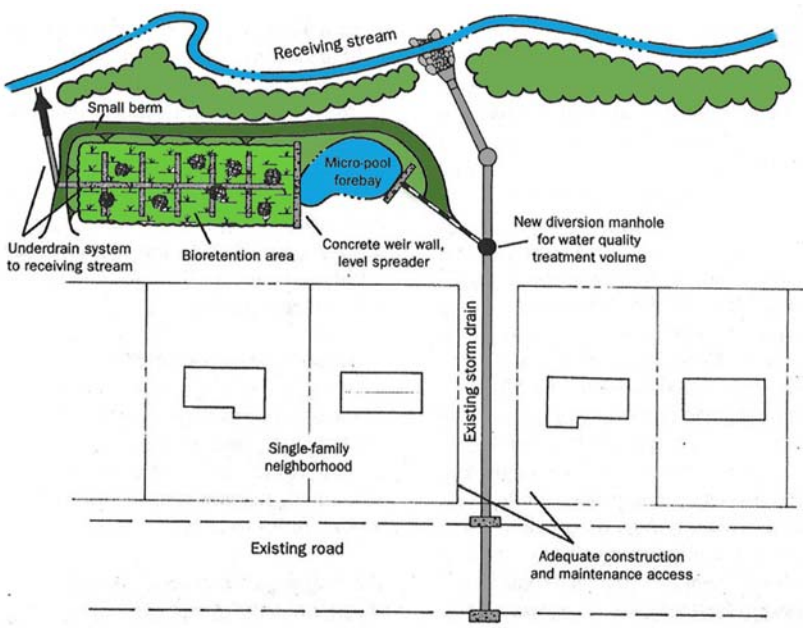

C.6.3 Highway Rights-of-Way

Open spaces associated with highway rights-of-way such as medians, shoulders, and cloverleaf areas also present opportunities to incorporate new stormwater treatment practices. Common treatment practices used in these types of retrofits include vegetated swales, bioretention, WVTSs, and extended detention ponds. Traffic, safety,

Formatted Table

Formatted: Font: 10 pt

and maintenance access are important considerations for determining appropriate locations for highway right-of-way retrofits.

~~Figure C-3 – Wet Swale Used to Treat Highway Runoff~~

~~Source: DNREC Photo~~

C.6.4 Parking Lots

Parking lots can be ideal candidates for a wide range of stormwater retrofits. Potentially applicable retrofits include site-planning techniques and small-scale management measures to reduce impervious coverage and promote increased infiltration (Chapter Four), as well as a variety of larger, end-of-pipe treatment practices.

Redevelopment of older commercial properties, which were often designed with oversized parking lots and almost 100 percent impervious coverage, is one of the most common and environmentally beneficial opportunities for parking lot stormwater retrofits.

Formatted Table

Formatted: Font: 10 pt

Figure C-3 Wet Swale Used to Treat Highway Runoff

Source: DNREC Photo

Alternative site design and LID management practices are well-suited to existing developed areas because most of these practices use a small amount of land and are easily integrated into existing parking areas. Examples of these parking lot stormwater retrofits include:

Incorporating Bioretention Into Parking Lot Islands and Landscaping

Parking lot islands, landscaped areas, and tree planter boxes can be converted into functional bioretention areas to reduce and treat stormwater runoff.

Removing Curbing and Adding Slotted Curb Stops

Curbs along the edge of parking lots can sometimes be removed or slotted to re-route runoff to vegetated areas, buffer strips, or bioretention facilities. The capacity of existing swales may need to be evaluated and expanded, where necessary, as part of this retrofit option.

~~**Figure C-4 Example of a parking lot retrofit where curbs were removed, allowing runoff to sheet flow into a bioretention area. This site is also a LUHPPL, so the bioretention area had to be lined.**~~

Formatted: No widow/orphan control, Don't keep with next, Don't keep lines together

Formatted Table

Formatted: Font: 10 pt

~~Source: LID Center Photos~~

Infiltrating Clean Roof Runoff from Buildings

In some instances, building roof drains connected to the stormwater drainage system can be disconnected and re-directed to vegetated areas, buffer strips, bioretention facilities, or infiltration structures (dry wells or infiltration trenches).

Figure C-4 Example of a parking lot retrofit where curbs were removed, allowing runoff to sheet flow into a bioretention area. This site is also a LUHPPL, so the bioretention area had to be lined.

Formatted Table

Formatted: Font: 10 pt

Source: LID Center Photos

Formatted: Indent: Left: 0.75", No bullets or numbering, No widow/orphan control, Don't keep with next, Don't keep lines together

Formatted: No widow/orphan control, Don't keep with next, Don't keep lines together

Incorporating New Treatment Practices at the Edge of Parking Lots

New stormwater treatment practices such as bioretention, sand filters, and WVTSs can often be incorporated at the edge of large parking lots.

Use of Permeable Paving Materials

Existing impermeable pavement in overflow parking or other low-traffic areas can sometimes be replaced with alternative, permeable materials such as porous asphalt, porous concrete, modular concrete paving blocks, modular concrete or plastic lattice, or cast-in-place concrete grids. (see Section 5.4 for more information on permeable pavements). Site-specific factors including traffic volumes, soil permeability, maintenance, sediment loads, and land use must be carefully considered for the successful application of permeable paving materials for new development or retrofit applications.

Utilizing Proprietary Devices

Many proprietary devices have been developed recently that utilize various pollutant removal techniques ranging from swirl concentrators to filters. Due to their typically compact size and/or ability to be placed in existing catch basins and manholes, these devices can be ideal for retrofit purposes. Maintenance frequency can be an issue for some of these devices to keep them working effectively; maintenance capacity of the municipality and/or homeowner's association should be carefully considered for successful application of proprietary devices for retrofit applications.

Formatted Table

Formatted: Font: 10 pt

C.6.5 Practices in Existing Conveyance Channels

Existing (man-made) channels and other drainage conveyances classified as areas subject to storm flow (ASSFs – regulated wetland, work in these areas will require a permit) such as grass channels, can be modified to reduce flow velocities and enhance pollutant removal. Weir walls or riprap check dams placed across a channel create opportunities for ponding, infiltration, and establishment of vegetation upstream of the retrofit (Claytor, Center for Watershed Protection, 2000). Channel retrofit~~s~~ practices include bank stabilization of eroded areas and placement of flow deflectors, boulders, and low-flow channels. Channel retrofits may require evaluation of potential flooding and floodplain impacts resulting from altered channel conveyance.

C.7 On-site Retrofits

C.7.1 LUHPPL Operations

LUHPPLs are challenging sites for stormwater management. However, there are a few BMPs that are ideal for retrofitting these contaminated locations. Filters and bioretention areas can be installed in these areas, as long as they are lined to prevent infiltration to the underlying soils and groundwater.

C.7.2 Small Parking Lots

Small parking lots (less than 5 acres) can be modified to provide treatment in practices installed within islands or ~~on~~along the ~~margins.~~perimeter. In many cases, the parking lot is delineated in a series of smaller sub~~c~~watershed~~ntd~~s draining to several BMPs. The example shown in Figure C-4 illustrates how lined bioretention areas were used to retrofit parking lot islands.

C.7.3 Individual Rooftops

As described in Chapter Four of this manual, rooftops can be disconnected from impervious areas and from existing storm sewer connections to pervious areas nearby. This will help to attenuate and treat stormwater flows from generally clean surfaces (rooftops). Rainbarrels or cisterns are also great examples of retrofits for an individual roof.

~~C.7.3~~C.7.4 Individual Streets

Similar to the opportunities for highways, open spaces associated with individual streets such as medians, shoulders, and cul-de-sac areas present opportunities to incorporate new stormwater treatment practices. Traffic calming devices can be used to direct stormwater into a retrofit practice. Common treatment practices used in these types of retrofits include

Formatted: No widow/orphan control, Don't keep with next, Don't keep lines together

Formatted Table

Formatted: Font: 10 pt

vegetated swales and bioretention areas.

~~C.7.4 Individual Rooftops~~

~~As described in Chapter Four of this manual, rooftops can be disconnected from impervious areas and from existing storm sewer connections to pervious areas nearby. This will help to attenuate and treat stormwater flows from generally clean surfaces (rooftops). Rainbarrels or cisterns are also great examples of retrofits for an individual roof.~~

C.7.5 Little Retrofits

~~**Figure C-5 Use of a vegetated swale along a residential street (Source: CTNEMO)**~~

"Little retrofits" refers to converting or disconnecting isolated areas of impervious cover, such as medians and walkways, to drain towards existing landscaping or other pervious areas.

Figure C-5 Use of a vegetated swale along a residential street (Source: CTNEMO)

C.7.6 Hardscapes/Plazas

The drainage network in existing urban landscapes can be reconfigured to treat the stormwater runoff with landscaping and other urban design ~~features.~~fe atures. High visibility spaces offer an opportunity to celebrate stormwater as a resource and provide public education.

C.7.7 Underground

Underground practices are perfect retrofit practices for sites in urban areas or with very limited land. These practices can be used for infiltration or just stormwater storage and detention.

Formatted Table

Formatted: Font: 10 pt

APPENDIX D: SITE SPECIFIC DESIGN EXAMPLES

Three step-by-step Rhode Island design examples located are provided to help designers and plan reviewers better understand the new criteria in this Manual. The examples demonstrate how the site planning and stormwater criteria are applied, as well as some of the design procedures and performance criteria that should be considered when siting and designing a stormwater best management practice. A stormwater design for a typical single-lot/small-scale house is also included.

D.1 CASE STUDYDESIGN EXAMPLE #1: MEDIUMLOW-DENSITY RESIDENTIAL SITE

The **hypothetical** medium**low**-density residential subdivision, River ViewReaper Brook Estates, is located in South Fosternear the Village of Greenville in the Town of Smithfield, RI..[1] This step-by-step example illustrates how a designer would meet the site planning criteria, utilize LID techniques, and LID requirements of Minimum Standard No. 1, size dry swalesa representative bioretention basin to meet the WQ_v at the site. In general, the primary function of dry swales is to provide recharge (Re_v) and water quality treatment(WQ_v) requirements, size a dry swale to meet WQ_v requirements, and convey larger storms in a non-erosive condition. For this example, the post-development, 1-year and 10-year peak discharges are computedsize a detention basin to check for non-erosive flows and to ensure that the meet channel has capacity to convey the 10-year event. Channel protection (CP_v) and overbank flood volumes are not required at this site because it discharges into the Ponagansett River, which is included in Appendix I as a 4th order stream. protection volume (Q_p) requirements.

Figure D-1 River View Estates Site Plan (orange indicates disconnected rooftops, dry swales are shown in green with numbered outfalls, pink outlines drainage areas to the dry swales, and purple indicates the drainage area used in Step 8)

Formatted: Font: Bold

Formatted: Font: 8 pt, Not Bold

Formatted: Tab stops: 2", List tab

REVISION PENDING

[1] This is a hypothetical project and not related to a real project in the Town of Smithfield, nor are the zoning provisions and/or subdivision requirements presented here intended to reflect those of the Town of Smithfield. The development scenario is intended to be representative of typical zoning requirements that have been or could be adopted by Rhode Island municipalities.

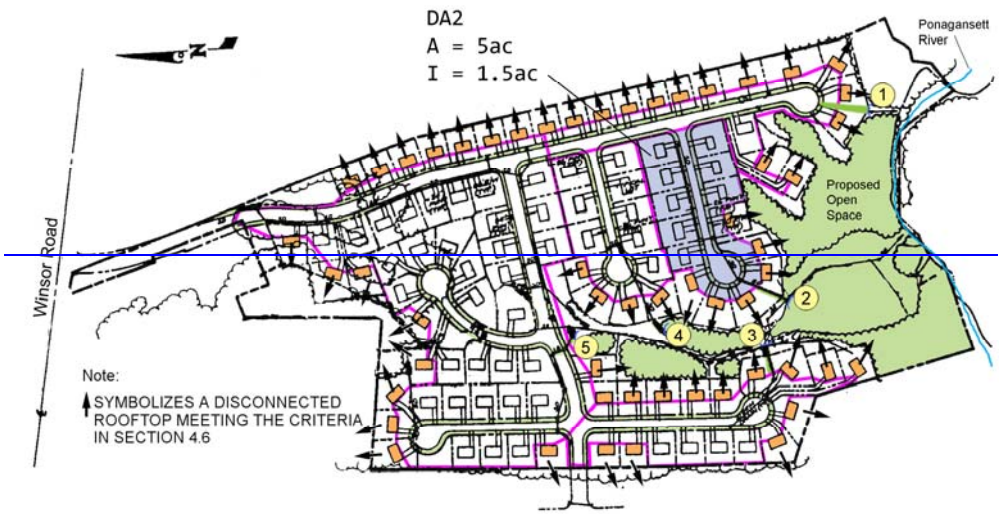

Reaper Brook Estates is located within the Reaper Brook watershed (a warm water fishery) and a 1st-order tributary to the Stillwater River. The underlying zoning of the project site requires a 2.75 acre minimum lot area for conventional single family lots, but applicants may also utilize conservation design subdivision (CDS) provisions that allow minimum lot areas to be reduced to a minimum of 1 acre. The project parcel is approximately 80.5 acres in size and is divided by Reaper Brook that runs through the center of the project (see Figure D-1). Public water and sewer is not available in the immediate vicinity of the project. The Reaper Brook stream valley includes a major wetland complex exceeding 3 acres in size with a 50-foot perimeter wetland, and the stream exceeds 10 feet in width and thus is afforded a 200-foot riverbank wetland buffer. Other wetland areas on-site are isolated and are less than 3 acres in size.

Listed below are the lot area and setback requirements of a conventional subdivision versus conservation design for this site.

Table D-1 ~~Base Data for River View Estates~~Zoning Dimensional Requirements

~~Location: South Foster, RI near the Ponagansett River~~**Lot Parameter**	**Conventional Subdivision**	**Conservation Subdivision**
~~Total Drainage Area, A = 40 ac; five study points at five outfalls~~Minimum Lot Area	2.75 acres	1.0 acres
~~Measured Impervious Area, I =11 ac~~Minimum Lot Frontage	60 feet	50 feet
Minimum Lot Width at Front Setback	150 feet	75 feet
~~Site Soils Type: 100% "C"; Recharge Factor, F = 0.25~~Minimum Front Setback	50 feet	25 feet

Formatted: Tab stops: 2", List tab
Formatted: Centered
Formatted Table
Formatted: Font: Bold, Condensed by 0.2 pt
Formatted: Font: 11 pt, Condensed by 0.2 pt
Formatted: Font: 11 pt, Condensed by 0.2 pt
Formatted: Adjust space between Latin and Asian text, Adjust space between Asian text and numbers
Formatted Table
Formatted: Font: 11 pt, Not Bold, No underline, Font color: Auto, Condensed by 0.2 pt

~~Location: South Foster, RI near the Ponagansett River~~**Lot Parameter**	**Conventional Subdivision**	**Conservation Subdivision**
~~Site Data: 100 Single-Family Residential Lots (~ ½ acre lots)~~Minimum Side Yard	35 feet	12 feet
Minimum Rear Yard	60 feet	30 feet

As part of the conservation development process, applicants must prepare a plan that illustrates an allowable development yield in conformance with the conventional zoning. In this case, the project proponent was able to prepare a plan for 19 lots meeting the dimensional requirements of Table D-1, and served by onsite wastewater treatment systems (OWTS), private wells, and a series of conventional extended detention ponds (see Figure D-1).

Figure D-1 Reaper Brook Estates Site Yield Plan

The Yield Plan results in the following:

- 19 single-family lots of at least 2.75 acres and average lot size of 3.32 acres;
- 28.0 acres of disturbed area;
- 15.38 acres of open space (outside of lot areas);
- 3,200 linear feet of street; and
- 5.51 acres of impervious cover (roads, houses, and driveways).

Formatted: Centered

Formatted Table

Formatted: Font: Bold, Condensed by 0.2 pt

Formatted: Space After: 0 pt

Formatted: Font: 11 pt, Condensed by 0.2 pt

Formatted: Font color: Auto

Formatted: Adjust space between Latin and Asian text, Adjust space between Asian text and numbers, Tab stops: 2", List tab

The conservation design subdivision also results in a yield of 19 lots meeting the dimensional requirements of Table D-1 and served by individual OWTSs and private wells. The CDS plan, however, clusters the 19 lots on one side of the project, completely preserving the west side of Reaper Brook as undisturbed open space (see Figure D-2). The second access road and entire construction project to the west of Reaper Brook are not necessary. Lots exceeding 1 acre are sufficient in size to support the same size houses as the conventional design, thus retaining comparable market value.

Figure D-2 Reaper Brook Estates Conservation Design Subdivision Plan

Two outfall locations are proposed, designated as Outfall A and Outfall B.

At Outfall A: Stormwater structural controls measures include **3 bioretention facilities** and **dry swales** to meet recharge and water quality requirements. These facilities then drain to a **dry extended detention pond** to meet channel protection and overbank controls (See Figures D-3 and D-4).

At Outfall B: Stormwater structural control measures include **dry swales** to meet recharge and water quality requirements, which then drain to an infiltration facility to meet channel protection and overbank peak flow attenuation requirements.

The CDS Plan results in the following:

- 19 single family lots of at least 1.1 acres and average lot size of:1.37 acres;
- 20.3 acres of disturbed area;
- 51.7 acres of open space (outside of lot areas);
- 2,500 linear feet of street; and
- 3.83 acres of impervious cover (road, houses, driveways, and community parking lot).

Table D-2 Base Data for Reaper Brook Estates

Location: Smithfield, RI, discharging to Reaper Brook (1st-order stream) near the Stillwater River, a Warm Water fishery.		
Total parcel site area, (A) = 80.5 acres; two study points at two outfalls[1]. Outfall A has a post-development drainage area of 20.83 acres, Outfall B has a post-development drainage area of 2.33 acres.		
Measured Impervious Area, I = 3.83 acres (3.36 acres at Outfall A; 0.47 acres at Outfall B).		
Site Soils Type: 100% "B"; Recharge Factor, F = 0.35. Loamy-sand soils with average depth to groundwater ~ 10.0 feet.		
Summary of Hydrologic Data[2]		
Rainfall Depths		
1-year, 24-hour, Type III	=	3.1 inches
10-year, 24-hour, Type III	=	5.0 inches
100-year, 24-hour, Type III	=	8.9 inches
Post-development Conditions:		
Drainage Area:	=	20.83 acres[1]
1-year, 24-hour peak discharge	=	10.3 cfs
1-year, 24-hour runoff volume	=	0.68" = 1.173 ac-ft = 51,096 ft^3
10-year, 24-hour peak discharge	=	39.4 cfs
100-year, 24-hour peak discharge	=	105.4 cfs
Pre-development Conditions:		
Drainage Area	=	15.3 acres[3]
10-year, 24-hour peak discharge	=	11.1 cfs
100-year, 24-hour peak discharge	=	44.9 cfs

[1] Note: Project discharges to two locations; this design example is for only one discharge location; for an actual project, applicants would need to meet criteria at both outfall locations.
[2] See computer-generated hydrologic data and pond routings developed using HydroCAD Stormwater Modeling System, Version 9.00 (note, applicants are not required to use a proprietary software system; public domain versions of NRCS TR-55/TR-20 are available).
[3] Note: Pre-development drainage area to Outfall A based on natural topography to this location. For simplicity, separate drainage area map is not shown. See Appendix K for detailed guidance for hydrology/hydraulic modeling. The post-development drainage area is larger than the pre-development drainage area due to proposed changes in grading at the site. However, the post-development drainage

area boundary does not cross a major subwatershed boundary and thus, no water transfers are occurring.

Figure D-3 Reaper Brook Estates Stormwater Management Controls – Plan View

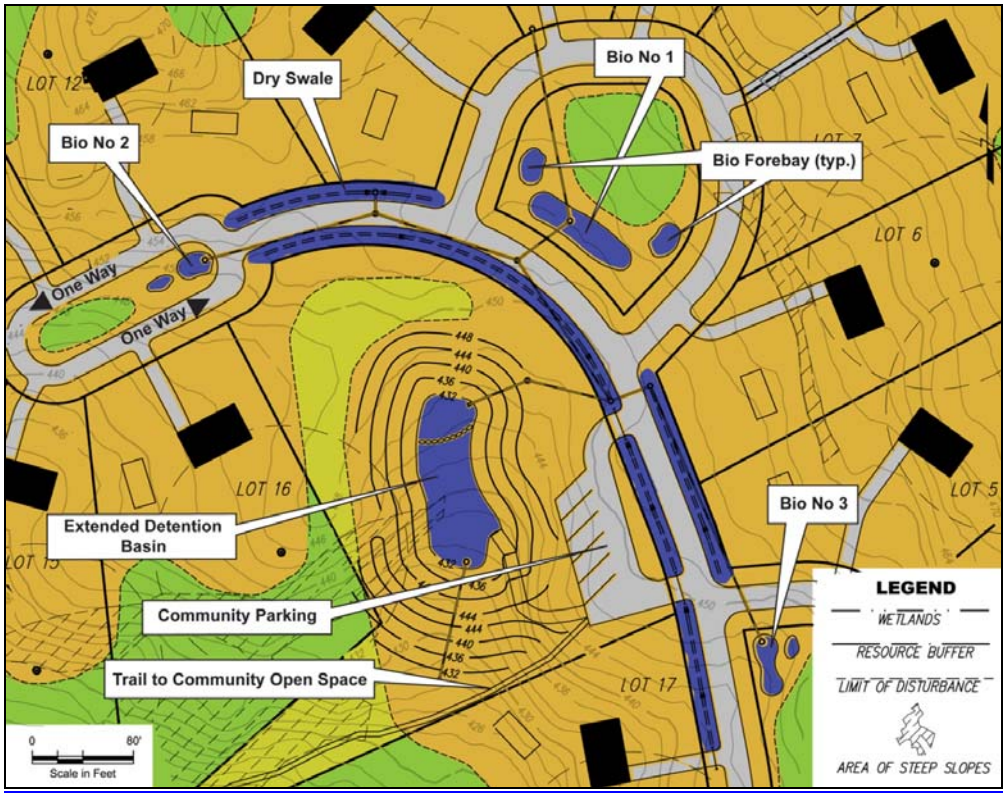

Figure D-4 Drainage Area Map for Reaper Brook Estates

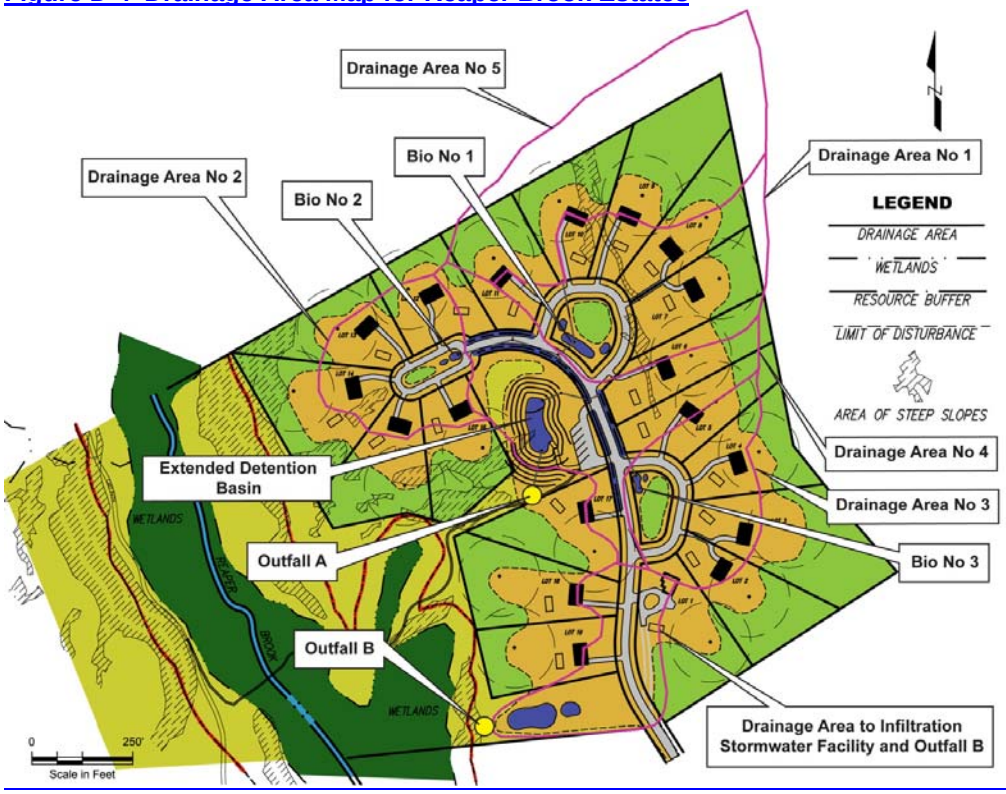

Step 1:	**Document Site Planning Process in Accordance with Standard 1.**

LID site planning and design measures ~~were~~are incorporated at this new development site to the maximum extent practicable. For example, impervious surfaces ~~were reduced by decreasing the width of the streets and driveways, as well as reducing the front setback so that the driveways are as short as permitted under the local zoning ordinance. Much of the rooftop runoff was disconnected to flow into vegetated areas instead of the storm drain system (see LID Credit calculation below). In addition, lots were clustered such that 7 acres of open space could be preserved around the Ponagansett River.~~are reduced by decreasing street width and length. Clustering the 19 lots on one side of the project reduces street length by 700 feet and impervious cover by nearly 1.7 acres; steep slopes are avoided and natural terrain is preserved where possible. Stormwater structural controls are used near the source using bioretention and dry swales. Refer to completed Table D-4 for compliance with the Checklist in Appendix A.

Step 2:	**Determine Required Design Criteria (i.e., Re_v, WQ_v, CP_v, Q_p)**

For Outfall A, 20.83 acres drain to the proposed detention pond located down-gradient from 3 bioretention facilities and a dry swale conveyance system. A storm drainage pipe system collects overflow from the bioretention facilities and swale system to discharge into the detention pond. In addition, since the bioretention facilities have been designed as exfilters, they will meet both recharge and water quality requirements as well as reduce the runoff volume for the channel protection volume, and to a lesser extent, overbank controls.

- Re_v = (1")(F)(I)/12: Recharge is required at the site based on land use and soils. Use ~~LID Credit~~exfiltrating bioretention to meet this requirement.
- WQ_v = (1")(I)/12: The WQ_v ~~will be reduced by the LID Credit, and the remaining~~ requirement will be ~~treated with~~ managed by bioretention and dry swales.
- CP_v~~: The CP_v does not need to be managed because the site discharges to a 4th-order stream~~ = 24-hour ED of post-development runoff from 1-year, 24-hour (Type III) storm: The CP_v is required because the site drains to a 1st-order stream (< 4th-order tributary), the site impervious area is greater than 1 acre, and the post-development runoff from the 1-year, 24-hour (Type III) storm is 10.3 cfs, which is > than 2.0 cfs.
- ~~Q_p~~Q_p = Peak flow attenuation of the 10-year and 100-year, 24-hour (Type III) storm: The Q_p ~~does not need to be managed~~ is required because the site ~~discharges~~drains to a 1st-order stream (< 4th-order ~~stream.~~tributary).
- A downstream analysis is not required because the ~~project meets~~project's disturbed area does not meet the thresholds in Table 3-7 in terms of ~~size~~area of disturbance and impervious percentage (~~40~~20.3 acres and ~~27.5~~< 50% impervious).

Step 3: Compute Required ~~Design Criteria, Using LID Credit~~Storage Volumes

Given Base Data in Table D-1~~, use Percent Area Method from Section 4.6:~~ (for Outfall A):

The Recharge ~~Area Requiring Treatment, Re_a = (~~Volume (Re_v) is calculated using the equation from Section 3.3.2: For HSG B soils, F~~)(I) = (~~ = 0.~~25)(11~~35 and I = 3.36 ac~~) = 2.75~~:

- Re_v = (1")(F)(I)/12 = (1")(0.35)(3.36 ac)/12 = **.098 ac-ft (= 4,269 ft^3)**

The ~~water quality volume~~ Water Quality Volume (WQ_v) is calculated using the equation from Section 3.3.3: For I = 3.36 ac:

- ~~Required Water Quality Volume,~~ WQ_v = (1.0")(I)/12 = 1.0" (~~11~~3.36 ac)/12 = **0.~~9~~ 28 ac-ft (12,197 ft^3)**

~~Rooftop Credit~~

~~53 houses disconnected to qualifying pervious areas~~

~~Average house area = 2,500 ft^2~~

Formatted: Underline
Formatted: Font color: Auto
Formatted: Indent: Left: 0"
Formatted: Font: Bold
Formatted: Font: Bold
Formatted: Font: Bold

~~Net impervious area reduction = (# of houses)(average house area, ft^2) / (43,560 ft^2/ac)~~

~~Net~~Check WQ_v > minimum req'd 0.2" for disturbed area (14.4 acres) draining to Outfall A:

- WQ_v min = 0.2"(14.4 ac)/12 = 0.24 ac-ft; which is less than the computed value, so use 0.28 ac-ft

The Channel Protection Volume (CP_v) is calculated using the "short-cut" routing equation from Section 3.3.4: The 1-year runoff from project (after some infiltration and attenuation by the 3 up-gradient bioretention facilities) = 0.889 ac-ft = 38,725 ft^3.

Note, without these up-gradient facilities, the runoff volume from the 1-year storm would be substantially larger as shown in table D-2 (1.173 ac-ft = 51,096 ft^3), illustrating the substantial runoff reduction benefits of these facilities.

- $V_s = CP_v = 0.65 * V_r = 0.65$ (38,725 ft^3) = **25,171 ft^3**

The Overbank Flood Protection (Q_p) requirement states that the post-development peak discharge rates for the 10- and 100-year, 24 hour (Type III) storms be reduced to the pre-development levels. For Outfall A, the pre-development 10 and 100-year rates are 11.1 cfs and 44.9 cfs, respectively. The dry detention basin must be sized to provide adequate storage to attenuate the post-development flow to these levels. See Step 8 below.

Step 4: Size Bioretention Facilities to Meet Re_v and WQ_v Requirements.

Bioretention facilities are sized in accordance with the treatment requirements in Section 5.5.4 according to the following equation:

$$A_f = (WQ_v)\,(d_f) / [(k)\,(h_f + d_f)\,(t_f)]$$

Where:

A_f = Surface area of filter bed (ft^2)
d_f = Filter bed depth (ft)
k = Coefficient of permeability of filter media (ft/day)
h_f = Average height of water above filter bed (ft)
t_f = Design filter bed drain time (days)
(2 days is the maximum t_f for bioretention)

Using Bioretention Area No. 2 (Bio 2) as an example, where the Drainage Area = 2.42 acres, and the impervious area ~~reduction = (53) (2,500~~= 0.51 acres:

Formatted: Font color: Auto

Compute WQv = (1") 0.51 ac/12"/ft = 0.0425 ac-ft = 1,851.1 ft^3

For a filter bed depth of 2.5 feet, a k of 1 ft/day, and maximum head of 9" (average head of 4.5") and a 2-day drain time:

A_f = 1,851.1 ft^3(2.5 ft)/[(1.0 ft/day)(0.375 ft + 2.5 ft)(2 days)] = **805 ft^2**

Set overflow inlet elevation 0.75 ft above bioretention bottom elevation, round-up surface area to **850 ft^2**.

Size Pretreatment Forebay: The sediment forebay shall have a minimum volume equal to 25% of the WQ_v and a minimum surface sized in accordance with Section 6.4.1.

Min volume = 0.25 (1,851.1 ft^3) = 462.8 ft^3; Minimum Surface Area (A_s) = 5,750 (Q)

Where:

$Q = \%WQ_v/86{,}400 = 462.8/86{,}400 = .0054$ cfs.

A_s = 5,750 (.0054) = 30.8 ft^2~~) / (43,560~~

Use A_s = 462.8/3.0 ft depth = 154 ft^2~~/ac) = 3.0 acres~~ or approx. 15 ft x 10 ft x 3 ft deep.

~~New~~

Using HydroCAD (or other generally accepted TR-55/TR-20 hydrologic/hydraulic software), designers can model these systems, with the following adjustments:

The method of computing the water quality flow (Section 3.3.3.2) must be followed to adjust the CN to generate runoff equivalent to the WQ_v for the 1.2 inch precipitation event, using the following equation:

$$CN = 1000 / [10 + 5P + 10Q - 10(Q^2 + 1.25\,QP)^{1/2}]$$

Where:

P = rainfall, in inches (use 1.2 inches for the Water Quality Storm that produces 1 inch of runoff from impervious ~~area = (Impervious area) – (Net~~*surfaces)*

Q = runoff volume, in watershed inches (equal to WQ_v ÷ total watershed area)

Calculate the watershed runoff volume in inches as follows:

Q = (0.0425 ac-ft/2.42 ac)(12"/ft) = 0.211 inches

$$CN = 1000 / [10 + 5(1.2) + 10(.211) - 10((.211)^2 + 1.25(.211)(1.2))^{1/2}] = 83.06$$

use CN = 83

Then, run the model using the exfiltration outlet structure with constant velocity rate of exfiltration = 2.41"/hour. This is the recommended rate for loamy-sand soils, which is the texture of the required bioretention soil described in Chapter Five and Appendix F, per Table 5-3 "Design Infiltration Rates for Different Soil Texture Classes." This rate is used in hydraulic routing to reflect the design infiltration rate when using NRCS methods for a Type III, 24-hour storm where the vast majority of the runoff enters the system in just a few hours. Note, this is different from the hydraulic conductivity (k = 1 ft/day rate) used in establishing the minimum surface area, which is reflective of the long-term acceptance rate over a range of different storm intensities and durations with a 2-day drawdown.

Formatted: Font color: Auto

Formatted: Font color: Auto

Formatted: Indent: First line: 0", Space After: 0 pt, Adjust space between Latin and Asian text, Adjust space between Asian text and numbers, Tab stops: -1", Left + -0.5", Left + 0", Left + 0.25", Left + 0.5", Left + 0.75", Left + 1", Left + 1.25", Left + 1.5", Left + 1.75", Left + 2", Left + 2.25", Left + 2.5", Left + 2.75", Left + 3", Left + 3.25", Left + 3.5", Left + 3.75", Left + 4", Left + 4.25", Left + 4.5", Left + 4.75", Left + 5", Left + 5.25", Left

Formatted: Font color: Auto

Formatted: Font: Italic, Font color: Auto

The Bioretention No. 2 must have a minimum surface area of 850 ft^2 and a volume equal to at least ¾ of the WQ_v, including the forebay volume (per requirements in Chapter Five). For Bio2, WQ_v = 1851.1 ft^3, min Vol = 0.75(1,851.1 ft^3) = 1,388.3 ft^3

With a 9" ponding depth and 2.5 media depth, calculate available storage above and within the facility: surface ponding Vol @ depth = 850 ft^2 (0.75 ft) = 638 ft^3. Volume of voids within media = 850 ft^2 (2.5 ft) (0.33) = 701 ft^3. Sediment forebay volume = 462.8 ft^3. Total volume = 638 + 701 + 462.8 = 1,801 ft^3 > 1,388.3 ft^3. OK.

Figure D-5 Routing Diagram and Runoff Summary for Bioretention No. 2 Sizing

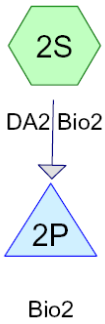

Reaper Brook_WQv *Type III 24-hr WQv Rainfall=1.20"*
Prepared by Horsley Witten Group, Inc. Printed 1/23/2010
HydroCAD® 9.00 s/n 02800 © 2009 HydroCAD Software Solutions LLC Page 6

Summary for Subcatchment 2S: DA2 Bio2

Runoff = 0.50 cfs @ 12.10 hrs, Volume= 0.044 af, Depth= 0.22"

Runoff by SCS TR-20 method, UH=SCS, Time Span= 0.00-30.00 hrs, dt= 0.03 hrs
Type III 24-hr WQv Rainfall=1.20"

	Area (ac)	CN	Description
*	2.420	83	Modified CN
	2.420		100.00% Pervious Area

Tc (min)	Length (feet)	Slope (ft/ft)	Velocity (ft/sec)	Capacity (cfs)	Description
5.0					**Direct Entry,**

Figure D-6 HydroCAD Routing Results of Bioretention No. 2 for WQ_v

Reaper Brook_WQv *Type III 24-hr WQv Rainfall=1.20"*
Prepared by Horsley Witten Group, Inc. Printed 1/23/2010
HydroCAD® 9.00 s/n 02800 © 2009 HydroCAD Software Solutions LLC Page 5

Summary for Pond 2P: Bio2

Inflow Area = 2.420 ac, 0.00% Impervious, Inflow Depth = 0.22" for WQv event
Inflow = 0.50 cfs @ 12.10 hrs, Volume= 0.044 af
Outflow = 0.06 cfs @ 13.83 hrs, Volume= 0.044 af, Atten= 88%, Lag= 103.9 min
Discarded = 0.06 cfs @ 13.83 hrs, Volume= 0.044 af
Primary = 0.00 cfs @ 0.00 hrs, Volume= 0.000 af

Routing by Stor-Ind method, Time Span= 0.00-30.00 hrs, dt= 0.03 hrs
Peak Elev= 447.63' @ 13.83 hrs Surf.Area= 1,090 sf Storage= 612 cf

Plug-Flow detention time= 105.0 min calculated for 0.044 af (100% of inflow)
Center-of-Mass det. time= 104.9 min (1,000.8 - 895.9)

Volume	Invert	Avail.Storage	Storage Description
#1	447.00'	2,516 cf	**Custom Stage Data (Prismatic)**Listed below (Recalc)

Elevation (feet)	Surf.Area (sq-ft)	Inc.Store (cubic-feet)	Cum.Store (cubic-feet)
447.00	850	0	0
447.75	1,135	744	744
449.00	1,700	1,772	2,516

Device	Routing	Invert	Outlet Devices
#1	Discarded	447.00'	**2.410 in/hr Exfiltration over Surface area**
#2	Device 3	447.75'	**24.0" x 24.0" Horiz. Orifice/Grate** C= 0.600 Limited to weir flow at low heads
#3	Primary	443.00'	**18.0" Round Culvert** L= 260.0' RCP, square edge headwall, Ke= 0.500 Outlet Invert= 439.00' S= 0.0154 '/' Cc= 0.900 n= 0.013 Corrugated PE, smooth interior

Discarded OutFlow Max=0.06 cfs @ 13.83 hrs HW=447.63' (Free Discharge)
└**1=Exfiltration** (Exfiltration Controls 0.06 cfs)

Primary OutFlow Max=0.00 cfs @ 0.00 hrs HW=447.00' (Free Discharge)
└**3=Culvert** (Passes 0.00 cfs of 14.46 cfs potential flow)
└**2=Orifice/Grate** (Controls 0.00 cfs)

Step 5: Size Dry Swale System to Meet WQ_v Requirement.

The dry swale drains an area of 5.14 acres (DA 4, see Figure D-4), with total impervious area ~~reduction)~~= 1.1 acres. Size the Dry Swale in accordance with the treatment requirements in Section 5.7.4 (Same equation as for Bioretention).

~~New impervious area = 11.0 – 3.0 = 8.0 acres~~

~~Required recharge area (Re_a) is 2.75 acres and 3.0 acres were disconnected to QPAs; therefore,~~

Compute WQ_v = (1")(1.1 ac)/12"/ft = 0.093 ac-ft = **3,993 ft^3**

For a filter bed depth of 2.5 feet, a k of 1 ft/day, and maximum head of 6" (average head of 3") and a 2-day drain time.

A_f = 3,993.0 ft^3(2.5 ft)/[(1.0 ft/day)(0.25 ft + 2.5 ft)(2 days)] = **1,815 ft^2**

Swales will have bottom width of 2 feet, so the minimum length of swale required to treat DA 4 = 1,815 ft^2/ 2.0 ft = **907.5 ft**

Formatted: Space After: 0 pt, Adjust space between Latin and Asian text, Adjust space between Asian text and numbers, Tab stops: -1", Left + -0.5", Left + 0", Left + 0.25", Left + 0.5", Left + 0.75", Left + 1", Left + 1.25", Left + 1.5", Left + 1.75", Left + 2", Left + 2.25", Left + 2.5", Left + 2.75", Left + 3", Left + 3.25", Left + 3.5", Left + 3.75", Left + 4", Left + 4.25", Left + 4.5", Left + 4.75", Left + 5", Left + 5.25", Left

Formatted: Font color: Auto

Formatted: Font color: Auto

950 feet of swale are available within DA 4. Set minimum slope = 1.0%. Set all drainage inlets at an overflow elevation 6 inches above the swale bottom elevation.

Note, dry swale is designed with an underdrain system; and thus, does not meet the recharge ~~requirement has been met by this credit.~~

Formatted: Font color: Auto

~~New WQ_v = (1") (New impervious area) / 12~~

~~New WQ_v = 1.0" (8.0) / 12 = 0.7 acre-feet; or a 0.2 acre-foot reduction~~

~~Percent Reductions Using Rooftop Disconnection Credit:~~

~~Required Re_v = 100% Reduction~~

~~Required WQ_v = (Original WQ_v – New WQ_v) / (Original WQ_v)~~

~~Required WQ_v = (0.9 – 0.7) /0.9 = 0.22 = 22% Reduction~~

~~**Step 4: Determine if the development site and conditions are appropriate for the use of a dry swale.**~~

~~The site conditions are appropriate for a dry swale. The proposed road grade in the vicinity of the dry swale is approximately 2.0%. There is sufficient area to accommodate the dry swale within the roadside right of way (15 feet on either side). This dry swale design will have an "open bottom" (i.e., no impermeable liner) to allow groundwater recharge, but given that the soils at the site are HSG "C", there is also an underdrain system to convey the water that does not infiltrate downstream.~~

Figure D-2 (a) Plan View and (b) Cross-Section of Dry Swale

a)

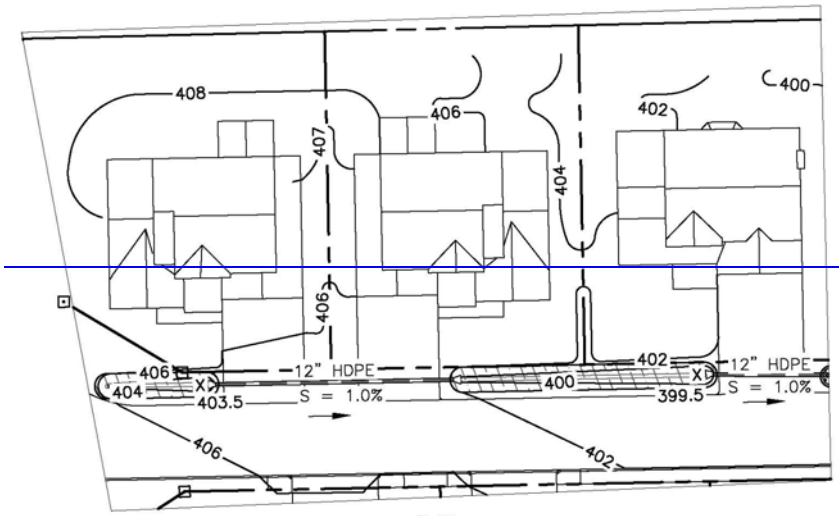

PLAN

b)

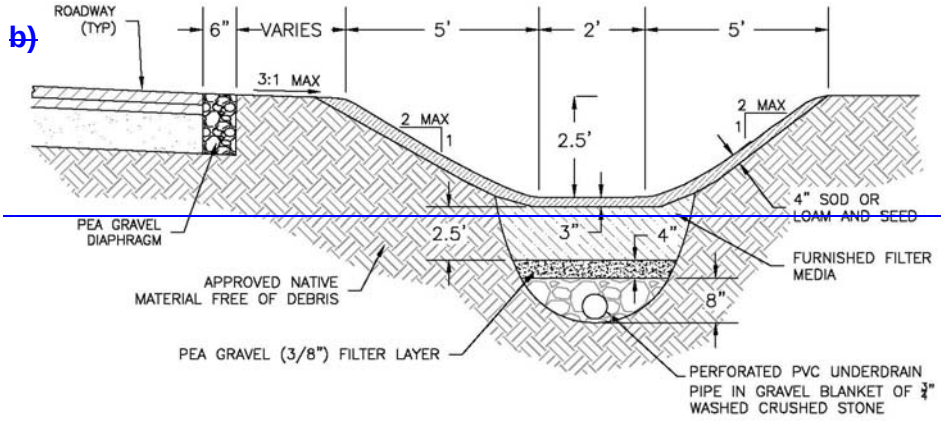

CROSS SECTION

Step 5: Confirm local design criteria **and applicability.**

There are no additional requirements for this site.

Formatted: Indent: Left: 0", First line: 0", Border: Top: (No border), Bottom: (No border), Left: (No border), Right: (No border), Tab stops: -1", Left + -0.5", Left + 0", Left + 0.25", Left + 0.5", Left + 0.75", Left + 1", Left + 1.25", Left + 1.5", Left + 1.75", Left + 2", Left + 2.25", Left + 2.5", Left + 2.75", Left + 3", Left + 3.25", Left + 3.5", Left + 3.75", Left + 4", Left + 4.25", Left + 4.5", Left + 4.75", Left + 5", Left + 5.25", Left

Formatted: Font: Not Bold

Formatted: Font: Not Bold

Formatted: No underline

~~Step 6: Determine size of dry swale area.~~

~~The dry swale treats the WQ_v by filtering it through a filter bed. The following equation (also used for filtering BMPs) is used to size the surface area of the dry swale, given a maximum depth of 18 inches as required in Section 5.7.4.~~

$$A_f = (WQ_v)(d_f) / [(k)(h_f + d_f)(t_f)]$$

~~Where: A_f = surface area of filter bed (ft^2)~~
~~WQ_v = Water quality volume (ft^3)~~
~~d_f = filter bed depth (ft) (recommended 2.5 ft from Section 5.7.4)~~
~~k = filter media coefficient of permeability (ft/day) (use same media as bioretention)~~
~~h_f = average height of water above filter bed (ft) (i.e., ½ the max depth)~~
~~t_f = design filter bed drain time (days) (2 days is recommended)~~

~~WQ_v = (0.7 ac-ft) * (43,560 ft^2/ac) = 30,492 ft^3~~

~~A_f = (30,492 ft^3) (2.5 ft) / [(1 ft/day) (0.75 ft + 2.5 ft) (2 days)]~~
~~(where k = 1 ft/day, h_f = 0.75 ft, t_f = 2 days)~~

~~A_f = 11,728 ft^2~~

~~Step 7: Size a channel and compute the required length to store the water quality volume.~~

~~Provide bottom width, depth, length, and slope necessary to store WQ_v with a maximum of 18 inches of ponding (as required in Section 5.7.4).~~

~~Assume a trapezoidal channel with check dams (or similar structure) that retain a maximum WQ_v depth of 18 inches (see Figure D-3). Per the site plan, there is approximately 2,950 ft available for the swale along each side of the road, not including driveways where there will be culverts connecting the swale. The existing uphill invert is 408.5 ft, and the downstream invert is 373.0 ft.~~

~~Slope = (408.5 ft -373.0 ft)/1750 ft = 0.02 = 2.0%~~
~~Minimum slope 1.0% and maximum slope 4.0%, OK~~
~~Side slopes = 2:1 (given the space restraints of this development, use 2:1 slopes).~~

~~For a surface area of A_f = 11,728 ft^2 and a L = (2,950 ft *2) = 5,900 ft, the width of the bottom of the swale needs to be (11,728 ft^2 / 5,900 ft) = 1.99 ft. A minimum bottom width of 2 ft is required according to design criteria in Section 5.7.4; thus, the bottom width will be rounded up to 2.0 ft. For a WQ_v maximum depth of 18 inches (1.5 ft) and 2:1 side slopes, compute a top width of the WQ_v at (2.0 ft) + [2 * (2) (1.5 ft)] = 8.0 ft.~~

~~Compute number of check dams required to detain WQ$_v$. For a swale 5,900 ft long @ 2.0% slope, max depth of 18 inches (1.5 ft), place check dams at: 1.5 ft/0.02 = 75 ft so (5,900 ft/75 ft) = 78.7, so 79 check dams are required. Note, driveway culverts can be utilized to create the 18-inch max ponding depth.~~

~~Figure D-3 Longitudinal~~Figure D-7 Cross-section of Proposed Dry Swale ~~with Check Dam.~~

~~Top width of WQ$_v$~~

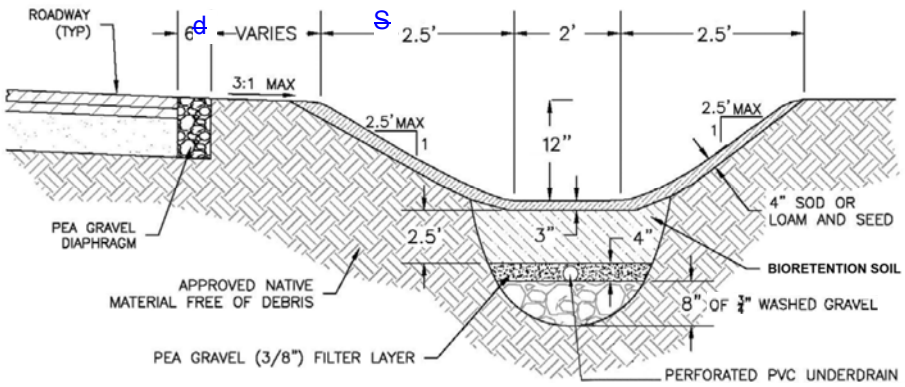

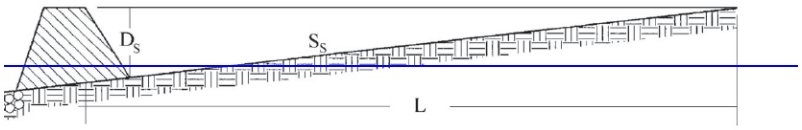

Step ~~8~~6: Check the velocity of the 1-year storm and the hydraulic capacity of the 10-year storm.

~~Develop Site Hydrologic Input Parameters and Perform Preliminary Hydrologic Calculations (see Table D-2).~~

Formatted: Keep with next, Keep lines together

Formatted: Left

Formatted: Font: Not Bold, Underline

~~Table D-2 River View Estates Post-Developed - TR-55 Output for 1- and 10-year storm events~~

PEAK DISCHARGE SUMMARY				
JOB:	River View Estates			
DRAINAGE AREA NAME:	POST DEVELOPMENT			
COVER DESCRIPTION	SOIL NAME	GROUP A,B,C,D?	CN from TABLE 2-2	AREA (In acres)
Grass	Woodbridge and Paxton fine sandy loam	C	74	3.50 Ac.
Impervious (roads, roofs, driveways)	Woodbridge and Paxton fine sandy loam	C	98	1.50 Ac.
			AREA SUBTOTALS:	5.00 Ac.
Time of Concentration 2-Yr 24 Hr Rainfall = 3.4 In	Surface Cover	Manning 'n' Pipe Diameter	Flow Length Avg Velocity	Slope Tt (Hrs)
Sheet Flow	dense grass	'n'=0.24	50 Ft.	5.00% 0.09 Hrs
Shallow Flow	Short Grass Pasture		50 Ft. 7.00 F.P.S.	3.00% 0.01 Hrs.
Channel Flow		'n'=0.030	600 Ft.	2.00% 0.02 Hrs.
Total Area in Acres =	5.00 Ac.	Total Sheet Flow= 0.09 Hrs.	Total Shallow Flow= 0.01 Hrs.	Total Channel Flow= 0.02 Hrs.
Weighted CN =	81			
Time Of Concentration =	0.13 Hrs.			
		RAINFALL TYPE III		
STORM	*Precipitation* (P) inches	*Runoff* (Q)	Qp, PEAK DISCHARGE	TOTAL STORM Volumes
1 Year	2.7 In.	1.0 In.	5.9 CFS	18,150 Cu. Ft.
10 Year	5.0 In.	2.8 In.	16.4 CFS	50,639 Cu. Ft.

Note: For this design example, the 1-year storm is used to check the channel geometry for non-erosive conditions, and the 10-year storm is used to check the conveyance capacity of the channel. ~~Any hydrologic model that uses SCS procedures, (e.g., TR-20, SWMM) can be used to perform preliminary hydrologic calculations. In this example, TR-55 was used to compute these values (see Table D-2). This project actually drains to five low points, with varying subwatersheds. For the sake of simplicity, the hydraulic calculations are performed at the subwatershed level, including the pavement and lawn that drains to the swales. The shaded subwatershed (DA2) in Figure D-2 will be used~~

~~for this calculation. Note, the resulting design geometry for the dry swales is conservative because it is sized based on the flows at the downstream end of each subwatershed; thus, the depth and width of the dry swale in the upstream areas may be reduced.~~

Formatted: Font: Not Bold

The hydraulic calculations are performed for the drainage area level for DA 4, including the pavement and lawn that drains to the swales (See Figure D-4, Drainage Area Map). Note also, the resulting design geometry for the dry swale is conservative because it is sized based on the flows at the downstream end of the drainage area; thus, the depth of the dry swale in the upstream areas could be reduced.

Check to ensure non-erosive velocity for 1-year storm:

Roadway slope = ~~2~~1.0%, check velocity and depth for the following parameters:

- $Q_{1\text{-year}}$ = 5.~~9 cfs~~3 cfs (generated from HydroCAD model)
- Bottom width = ~~8~~2.0 ft ~~(top width of WQ_v)~~
- Side slopes = 2.5:1
- Longitudinal slope = ~~2~~1.0%
- Manning's roughness coefficient (n) = 0.03

Using Manning's equation for a trapezoid channel:

$$Q = (a)\,(v) = (a)[1.49/n\,(R)^{2/3}\,(S)^{1/2}]; \quad a = \cancel{bd + zdd}\,b*d + z*d*d; \quad R=a\,/\,(b+\cancel{2d\sqrt{(zz}}\,2*d(z^2+1\cancel{)})^{1/2})$$

Where:

- v = velocity (ft/s)
- n = Manning's roughness coefficient,
- R = hydraulic radius (ft)
- a = cross sectional area (ft^2)
- S = channel longitudinal slope
- b = bottom width (ft)
- d = depth of water (ft)
- z = side slope (z:1)

Solve for depth and velocity.

Results:

a = (~~8~~2.0 * d) + 2.5(d * d) = ~~8~~2.0d + ~~2d~~^{2}2.5d^2

R = (~~8~~2.0d + ~~2d~~^{2}~~) / (8~~2.5d^2) / (2.0 + ~~2d√(5)) = (8~~2*d$(7.25)^{1/2}$) = (2.0d + ~~2d~~^{2}~~) / (8~~2.5d^2) / (2.0 + ~~4.47d~~5.39d)

Q = (~~8~~2.0d + ~~2d~~^{2}2.5d^2) [1.49/.03 * ((~~8~~2.0d + ~~2d~~^{2}~~) / (8~~2.5d^2) / (2.0 + ~~4.47d~~5.39d))$^{2/3}$ * 0.~~02~~^{1}01$^{1/2}$]

Depth

Due to complexity of equation, solve for d by trial and error. First, choose a depth that seems reasonable and solve for Q. Repeat until the solution for Q is equal to $Q_{1\text{-year}}$

(5.~~9~~3 cfs). Spreadsheets can be set up to help streamline this process, or an open channel flow model can be used.

Trial 1. Try a depth of 0.~~2~~3 ft.

a = ~~8~~2.0(0.~~2~~3) + 2.5(0.3)^{2}~~)^{2} = 1.68~~ = 0.83 ft^2
R = ~~1.68~~0.83 ft^2 / (~~8.0 + 4.47(0.2)) = 2~~.0~~.19~~ + 5.39(0.3)) = 0.23 ft
Q = ~~1.68~~0.83 ft^2 [1.49/.03 * (0.~~19~~23 ft)$^{2/3}$ * 0.~~020~~^{1}01$^{1/2}$] = ~~3.9~~1.5 cfs < $Q_{1\text{-year}}$.

Trial 2. Try a depth of 0.~~3~~5 ft.

a = ~~8~~2.0(0.~~3~~5) + 2.5(0.~~3~~5)^2 = ~~2.6~~ 1.63 ft^2
R = ~~2.6~~1.63 ft^2 / (~~8~~2.0 + ~~4.47~~5.39(0.~~3)) = 0.28~~5)) = .348 ft
Q = ~~2.6~~1.63 ft^2 [1.49/.03 * ~~(0.28~~(.348 ft)$^{2/3}$ * 0.~~020~~^{1}01$^{1/2}$] = 4.0 cfs < $Q_{1\text{-year}}$.

Trial 3. Try a depth of 0.6 ft.

a = 2.0(0.6) + 2.5(0.6)^2 = 2.1 ft^2
R = 2.1 ft^2 / (2.0 + 5.39(0.6)) = .4 ft
Q = 2.1 ft^2 [1.49/.03 * (.4 ft)$^{2/3}$ * 0.01$^{1/2}$] = 5.7~~.8~~ cfs > $Q_{1\text{-year}}$, so OK.

Thus, depth = 0.~~3 ft (provide at least 0.3 ft above top of check dams to accommodate this storm).~~6 ft.

Velocity

v = Q/a
v = 5.~~9~~7 cfs / 2.~~6~~1 ft^2 = 2.~~3~~7 ft/s (v is less than ~~5~~4.0 ft/s, OK)

Check to ensure adequate capacity for 10-year storm:
From hydrology information, the 10-year peak flow is ~~16.4~~13.7 cfs. Compute depth ~~and provide an additional 0.5 ft of freeboard above~~to carry the 10-year flow.

Roadway slope = ~~2~~1.0%, depth for the following parameters:

- $Q_{10\text{-year}}$ = ~~16.4~~13.7 cfs
- Bottom width = ~~8~~2.0 ~~ft (top width of WQ$_v$)~~
- Side slopes = 2.5:1
- Longitudinal slope = ~~2~~1.0%
- Manning's Coeff. = 0.03

Solve for depth using Manning's equation and trial and error method shown above.

Try a depth of 1.0~~.5~~ ft:

a = ~~8~~2.0(1.0) + 2.5~~) + 2(~~(1.0~~.5~~)^2 = 4.5 ft^2
R = 4.5 ft^2 / (~~8~~2.0 + ~~4.47~~(5.39(1.0~~.5~~)) = 0.~~44~~61 ft

Formatted: Superscript

$Q = 4.5\ ft^2\ [1.49/.03 * (0.44\underline{61}\ ft)^{2/3} * 0.\cancel{020}^{1}\underline{01}^{1/2}] = \cancel{18.3}\underline{16.1}$ cfs > $Q_{10\text{-year}}$, so OK.

~~Results:~~
~~Depth = 0.5 ft. Provide 0.5 ft, plus additional 0.5 ft of freeboard, above checkdams.~~
~~Total swale depth = 1.5 ft + 0.5 ft + 0.5 ft = 2.5 ft for a total top width of 12.0 ft.~~

~~Step 9: Set design elevations and dimensions.~~

~~WQ_v: depth = 1.5 ft (Height of Checkdam)~~

~~1-year: v = 3.9 ft/s, depth* = 0.5 ft + 0.3 ft = 0.8 ft~~

~~10-year: depth* = 1.5 ft + 0.5 ft = 2.0 ft~~

~~Set freeboard equal to 6 inches above 10-year depth = 2.0 ft +0.5 ft = 2.5 ft.~~
~~Top width = 12.0 ft (see detail).~~

~~*Note: Depth is calculated in the swale at a checkdam location. While in most cases the WQ_v ponded behind a checkdam will infiltrate through the filter media before the next storm event, the design should be conservative and allow for back-to-back rainfall events. Thus, for this example, the calculated 1-year storm depth is added to the height of the checkdam with the conservative assumption that water is ponded up to that level.~~

~~Step 10: Downstream Analysis.~~

~~A downstream analysis compares flow rates and velocities (for the overbank flood control storms) downstream to the location of the 10% rule for pre-developed conditions and proposed conditions. If flow rates in the river increase by less than 5% from the pre-developed condition, and no existing structures are impacted, then no additional analysis is necessary.~~

~~For this example, the site is 40 acres, so the downstream analysis study point is that point along the river which has a watershed of 400 acres. The peak flows and velocities from the 10-year and 100-year storm events are compared for the 400-acre watershed between pre- and post-development conditions. Designers should also consider flooding risks to downstream properties. The River View Estates property is located just upstream from a large reservoir (Barden Reservoir) with few structures nearby. The following values were obtained when comparing the peak flows in the river for pre- and post-development conditions using a hydraulic model:~~

~~Table D-3 Sample Results of Downstream Analysis~~

Step 7: Confirm Re_v has been met with the three bioretention facilities.

As computed above, Re_v = 0.098 ac-ft (= 4,269 ft^3). There are two ways to confirm compliance with the Recharge Criteria:

One method would be to confirm that the total volume exfiltrated by the three bioretention facilities prior to overflow exceeds the required Re_v. The HydroCAD model is the easiest way to confirm this, using the modified CN model run. This also assumes that the runoff filtered through the bioretention media (which is loamy sand as required in Chapter Five and Appendix F) also infiltrates into the underlying soils. Since the site soils are also loamy sands with a design infiltration rate = 2.41"/hr, this assumption is justified.

For Bio 1: Exfiltration Volume = 0.082 ac-ft (3,572 ft^3)
For Bio 2: Exfiltration Volume = 0.044 ac-ft (1,917 ft^3)
For Bio 3: Exfiltration Volume = 0.053 ac-ft (2,309 ft^3)

Total Recharge Volume = 0.179 ac-ft (7,798 ft^3) > 0.098 ac-ft (= 4,269 ft^3). OK

The second method is by the Percent Area Method (refer to Section 4.6.1.2). where,

Re_a = (F) (I)

Re_a = Required impervious area to be directed to a QPA (acres) or an approved infiltrating stormwater control measure (see Table 3-5)
F = Recharge factor based on Hydrologic Soil Group (HSG) (dimensionless)
I = Impervious area (acres)

For the Reaper Brook Site, with 100% B soils; Re_a = (0.35)(3.83 ac) = 1.34 acres.

For DA 1: I = 0.85 ac;
For DA 2: I = 0.51 ac; and
For DA 3: I = 0.6 ac.

Thus, the total DA draining to an approved infiltrating practice = 1.96 acres > 1.34 acres. OK.

Step 8: Size the dry extended detention basin to provide CP_v.

As computed in Step 3 above, CP_v = 0.65 * V_r = 0.65 (38,725 ft^3) = 25,171 ft^3

In accordance with Section 3.3.4, size the outlet orifice to release the 1-year inflow volume (V_r) at roughly a uniform rate over 24 hours:

Thus, Q_{CPv} = 38,725 ft^3 / (24 hours (3,600 seconds/hour)) = 0.45 cfs.

The Dry Extended Detention Basin has been graded to provide adequate storage volume to meet both the CP_v as well as Q_p requirements. (See Figure D-8 Extended Detention Plan View, and Figure D-9, Stage-Storage Curve).

Figure D-8 Dry Extended Detention Basin Plan View

D-9 Stage-Storage Curve for Dry Extended Detention Basin

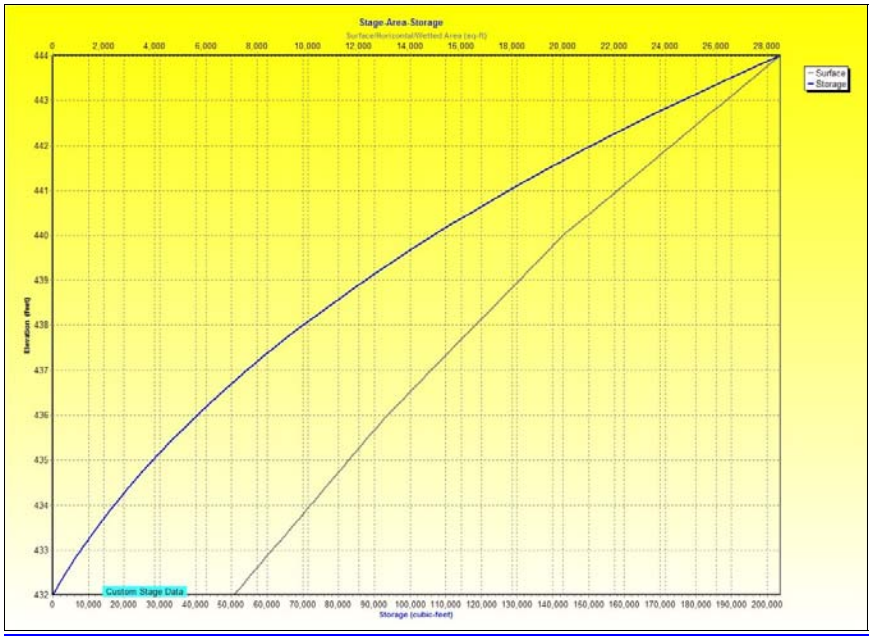

Read Elevation (for 25,171 ft^3) ~ 434.8, with basin bottom at elevation 432. Size orifice based on approx. average head: (434.8 - 432.0) / 2 = 1.4 ft.

Using the orifice equation: $Q_{CPv} = C(A)(2f*h_{avg})^{1/2}$, solve for A, then calculate orifice diameter (D):

$0.45 \text{ cfs} = 0.6 (A) (64.4*1.4)^{1/2}$:

$A = 0.08 \text{ ft}^2 = \pi D^2/4$: D = 0.32 ft(12"/ft) = 3.84 inches

Use D = 3.0 inches (will provide conservative detention time). See HydroCAD results (Figure D-11).

Figure D-10 HydroCAD Routing Model for Dry Extended Detention Basin

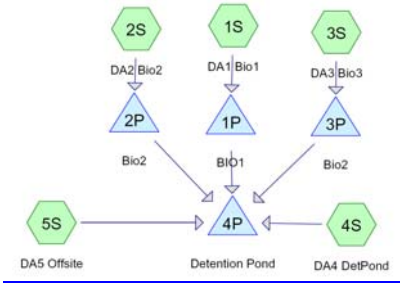

Figure D-11 HydroCAD Pond Routing for Extended Detention Pond for CP_v

100326_Reaper Brook_CDS *Type III 24-hr 1YR Rainfall=3.10"*
Prepared by Horsley Witten Group Printed 3/26/2010
HydroCAD® 9.00 s/n 02800 © 2009 HydroCAD Software Solutions LLC Page 12

Summary for Pond 4P: Detention Pond

Inflow Area = 20.830 ac, 19.18% Impervious, Inflow Depth = 0.51" for 1YR event
Inflow = 9.51 cfs @ 12.16 hrs, Volume= 0.889 af
Outflow = 0.39 cfs @ 17.39 hrs, Volume= 0.534 af, Atten= 96%, Lag= 313.8 min
Primary = 0.39 cfs @ 17.39 hrs, Volume= 0.534 af

Routing by Stor-Ind method, Time Span= 0.00-30.00 hrs, dt= 0.03 hrs
Peak Elev= 434.86' @ 17.39 hrs Surf.Area= 11,396 sf Storage= 26,486 cf

Plug-Flow detention time= 503.2 min calculated for 0.534 af (60% of inflow)
Center-of-Mass det. time= 396.9 min (1,254.6 - 857.7)

Volume	Invert	Avail.Storage	Storage Description
#1	432.00'	203,600 cf	**Custom Stage Data (Prismatic)**Listed below (Recalc)

Elevation (feet)	Surf.Area (sq-ft)	Inc.Store (cubic-feet)	Cum.Store (cubic-feet)
432.00	7,100	0	0
436.00	13,100	40,400	40,400
440.00	20,000	66,200	106,600
444.00	28,500	97,000	203,600

Device	Routing	Invert	Outlet Devices
#1	Device 4	432.00'	**3.0" Vert. Orifice/Grate** C= 0.600
#2	Device 4	434.90'	**24.0" W x 12.0" H Vert. Orifice/Grate** C= 0.600
#3	Device 4	437.00'	**36.0" W x 12.0" H Vert. Orifice/Grate** C= 0.600
#4	Primary	428.00'	**21.0" Round Culvert** L= 110.0' RCP, square edge headwall, Ke= 0.500 Outlet Invert= 426.00' S= 0.0182 '/' Cc= 0.900 n= 0.013 Concrete pipe, straight & clean

Primary OutFlow Max=0.39 cfs @ 17.39 hrs HW=434.86' (Free Discharge)
└─**4=Culvert** (Passes 0.39 cfs of 28.34 cfs potential flow)
  ├─**1=Orifice/Grate** (Orifice Controls 0.39 cfs @ 7.97 fps)
  ├─**2=Orifice/Grate** (Controls 0.00 cfs)
  └─**3=Orifice/Grate** (Controls 0.00 cfs)

Note, elevation of CP_v is approximately 434.9 ft, reflecting the fact that a 3-inch orifice was used, resulting in a conservative release rate. Also, note that a sediment forebay has been provided, though it is not explicitly required for an extended detention basin.

Step 9: Size dry extended detention basin to provide Q_p controls (for 10- & 100-year storm)

As presented above, the 10- and 100-year pre-development rates from the drainage area discharging to Outfall A are 11.1 cfs and 44.9 cfs, respectively.

Calculate the 10-year release rate and required storage.

$Q_{10\text{-}out}$ = 11.1 cfs - 0.5 cfs (value of 3" CP_v orifice at estimated 10-year water surface elevation) = 10.6 cfs.

Initial estimated 10-year elevation = 436.5 (using NRCS TR-55 Short Cut Routing Method as a starting point – refer to Figure H-10).

Size outlet orifice:

$Q_{10\text{-}out} = C\ (A)\ (2g(h))^{1/2}$, where h = 436.5 - (434.9 + 0.5) = 1.1 ft (assumes 12" high slot)

10.6 cfs = 0.6 (A) $(64.4(1.1))^{1/2}$: A = 2.1 ft^2. For 12"high slot, L = 2.1 ft = 25.2" use 24"

Use 24" x 12" vertical slot, invert elevation 434.9 ft. See HydroCAD output Figure D-12.

Figure D-12 HydroCAD Output for 10-Year, 24-hour (Type III) Storm

100326_Reaper Brook_CDS *Type III 24-hr 10YR Rainfall=5.00"*
Prepared by Horsley Witten Group Printed 3/26/2010
HydroCAD® 9.00 s/n 02800 © 2009 HydroCAD Software Solutions LLC Page 12

Summary for Pond 4P: Detention Pond

Inflow Area = 20.830 ac, 19.18% Impervious, Inflow Depth = 1.67" for 10YR event
Inflow = 39.44 cfs @ 12.10 hrs, Volume= 2.906 af
Outflow = 10.74 cfs @ 12.55 hrs, Volume= 2.457 af, Atten= 73%, Lag= 27.0 min
Primary = 10.74 cfs @ 12.55 hrs, Volume= 2.457 af

Routing by Stor-Ind method, Time Span= 0.00-30.00 hrs, dt= 0.03 hrs
Peak Elev= 436.55' @ 12.55 hrs Surf.Area= 14,050 sf Storage= 47,876 cf

Plug-Flow detention time= 179.1 min calculated for 2.455 af (84% of inflow)
Center-of-Mass det. time= 116.9 min (957.7 - 840.7)

Volume	Invert	Avail.Storage	Storage Description
#1	432.00'	203,600 cf	**Custom Stage Data (Prismatic)**Listed below (Recalc)

Elevation (feet)	Surf.Area (sq-ft)	Inc.Store (cubic-feet)	Cum.Store (cubic-feet)
432.00	7,100	0	0
436.00	13,100	40,400	40,400
440.00	20,000	66,200	106,600
444.00	28,500	97,000	203,600

Device	Routing	Invert	Outlet Devices
#1	Device 4	432.00'	**3.0" Vert. Orifice/Grate** C= 0.600
#2	Device 4	434.90'	**24.0" W x 12.0" H Vert. Orifice/Grate** C= 0.600
#3	Device 4	437.00'	**36.0" W x 12.0" H Vert. Orifice/Grate** C= 0.600
#4	Primary	428.00'	**21.0" Round Culvert** L= 110.0' RCP, square edge headwall, Ke= 0.500 Outlet Invert= 426.00' S= 0.0182 '/' Cc= 0.900 n= 0.013 Concrete pipe, straight & clean

Primary OutFlow Max=10.74 cfs @ 12.55 hrs HW=436.55' (Free Discharge)
└─**4=Culvert** (Passes 10.74 cfs of 32.08 cfs potential flow)
  ├─**1=Orifice/Grate** (Orifice Controls 0.50 cfs @ 10.13 fps)
  ├─**2=Orifice/Grate** (Orifice Controls 10.24 cfs @ 5.12 fps)
  └─**3=Orifice/Grate** (Controls 0.00 cfs)

Calculate the 100-year release rate and required storage.

$Q_{100\text{-}out}$ = 44.9 cfs – (18.5 cfs + 0.7) cfs (values 24" x 12" slot and 3" CP_v orifice at estimated 100-year water surface elevation) = 25.7 cfs.

Initial estimated 100-year elevation = 440.5 ft (using NRCS TR-55 Short Cut Routing Method as a starting point – refer to Figure H-10).

Size Outlet Pipe (Barrel) to control total outlet flow by elevation 440.5 ft (can use culvert charts, culvert software, hydraulic software, such as HydroCAD to estimate pipe capacity).

Use 21" RCP, upstream invert = 428.0 ft, downsteam invert = 426.0 ft (See HydroCAD output Figure D-13).

Figure D-13 HydroCAD Output for 100-Year 24-hour (Type III) Storm

100326_Reaper Brook_CDS *Type III 24-hr 100YR Rainfall=8.90"*
Prepared by Horsley Witten Group Printed 3/26/2010
HydroCAD® 9.00 s/n 02800 © 2009 HydroCAD Software Solutions LLC Page 12

Summary for Pond 4P: Detention Pond

Inflow Area = 20.830 ac, 19.18% Impervious, Inflow Depth = 4.75" for 100YR event
Inflow = 105.40 cfs @ 12.11 hrs, Volume= 8.240 af
Outflow = 38.96 cfs @ 12.44 hrs, Volume= 7.766 af, Atten= 63%, Lag= 20.3 min
Primary = 38.96 cfs @ 12.44 hrs, Volume= 7.766 af

Routing by Stor-Ind method, Time Span= 0.00-30.00 hrs, dt= 0.03 hrs
Peak Elev= 440.53' @ 12.44 hrs Surf.Area= 21,134 sf Storage= 117,575 cf

Plug-Flow detention time= 91.8 min calculated for 7.759 af (94% of inflow)
Center-of-Mass det. time= 61.9 min (884.2 - 822.3)

Volume	Invert	Avail.Storage	Storage Description
#1	432.00'	203,600 cf	**Custom Stage Data (Prismatic)**Listed below (Recalc)

Elevation (feet)	Surf.Area (sq-ft)	Inc.Store (cubic-feet)	Cum.Store (cubic-feet)
432.00	7,100	0	0
436.00	13,100	40,400	40,400
440.00	20,000	66,200	106,600
444.00	28,500	97,000	203,600

Device	Routing	Invert	Outlet Devices
#1	Device 4	432.00'	**3.0" Vert. Orifice/Grate** C= 0.600
#2	Device 4	434.90'	**24.0" W x 12.0" H Vert. Orifice/Grate** C= 0.600
#3	Device 4	437.00'	**36.0" W x 12.0" H Vert. Orifice/Grate** C= 0.600
#4	Primary	428.00'	**21.0" Round Culvert** L= 110.0' RCP, square edge headwall, Ke= 0.500 Outlet Invert= 426.00' S= 0.0182 '/' Cc= 0.900 n= 0.013 Concrete pipe, straight & clean

Primary OutFlow Max=38.96 cfs @ 12.44 hrs HW=440.53' (Free Discharge)
└─**4=Culvert** (Barrel Controls 38.96 cfs @ 16.20 fps)
├─**1=Orifice/Grate** (Passes < 0.69 cfs potential flow)
├─**2=Orifice/Grate** (Passes < 21.81 cfs potential flow)
└─**3=Orifice/Grate** (Passes < 25.12 cfs potential flow)

The calculated 100-year water surface elevation = 440.5 ft. Set emergency spillway elevation in native ground at elevation 440.6 ft and top of embankment elevation at 444.0 ft. Note, embankment exceeds 6 feet in height. Thus, if an immediate downstream hazard were present (e.g., road crossing or building in floodplain), a dam breach analysis would be required. See Table D-3 for a summary of results.

Table D-3 Design Example Summary of Results

Criteria	~~10-year Storm~~Required	~~100-year Storm~~Provided	Practice Notes
~~Pre-development~~Recharge Volume (Re_v)	~~769.85 cfs~~0.098 ac-ft	~~1,782.98 cfs~~0.178 ac-ft	3 exfiltrating bioretention facilities
Water Quality Volume (WQ_v)	0.28 ac-ft	> 0.28 ac-ft[1]	3 bioretention facilities and dry swale system
~~Post-development~~Channel Protection volume (CP_v)	~~771.47 cfs~~0.58 ac-ft	~~1,774~~0.61 ac-ft peak release rate= 0.4 cfs	Dry extended detention basin peak elev. = 434.9 ft
~~Percent Change~~Overbank	~~0.2%~~Pre-development peak:	~~0.4%~~Post-development basin peak release rate:	Detention storage 10-yr peak elev.= 436.6 ft

Formatted: Centered
Formatted: Condensed by 0.2 pt
Formatted Table
Formatted: Condensed by 0.2 pt
Formatted: Condensed by 0.2 pt
Formatted: Font: 10.5 pt, Condensed by 0.2 pt
Formatted: Font: 10.5 pt, Condensed by 0.2 pt
Formatted: Font: 11 pt, Not Bold, Condensed by 0.2 pt
Formatted Table
Formatted: Font: 10.5 pt, Condensed by 0.2 pt
Formatted: Font: 10.5 pt, Condensed by 0.2 pt
Formatted: Font: 10.5 pt, Condensed by 0.2 pt
Formatted: Font: 11 pt, Not Bold, Condensed by 0.2 pt

Protection (Q_p)	$Q_{p\text{-}10}$= 11.1 cfs $Q_{p\text{-}100}$ = 44.9 cfs	$Q_{p\text{-}10}$= 10.7 cfs $Q_{p\text{-}100}$ = 39.0 cfs	100-yr peak elev.= 440.5 ft

~~The percent change is less than 5%, so the project does not need to meet the CP_v and Q_p criteria.~~

~~**Step 11:**~~ [1] Because bioretention is a flow-through device the storage volume of these facilities must be at least ¾ of the computed WQ_v, yet total volume of infiltration plus dry swale volume exceeds 0.28 ac-ft.

Table D-4 Completed LID Site Planning and Design ~~pretreatment.~~

~~Pretreat with grassed side slopes and washed, pea stone diaphragm (curtain drain). Since runoff is not entering the swale directly from a concentrated inflow point (i.e., a pipe), no formal pretreatment chamber is required. Instead, pretreatment is provided by a washed, pea stone diaphragm (running parallel to the roadway shoulder) and the grass slopes leading to the edge of the channel (see Figure D-2).~~

~~Step 12: Choose vegetation~~Checklist for ~~the channel.~~Reaper Brook Estates

~~Choose vegetation based on factors such as resistance to erosion, resistance to drought and inundation, cost, aesthetics, maintenance, etc.~~

~~Based on the project slope range (0-5%), and 1-year velocity equal to approximately 3.9 ft/s, choose appropriate grass for channel (moist to well drained soils, higher permissible velocities, and good establishment rate). See Appendix B for more guidance on appropriate grasses. For this design example, tall fescue was chosen.~~

1. Strategies to Avoid the Impacts

A. Preservation of Undisturbed Areas

☐ Not Applied or N/A. *Use space below to explain why:*

Select from the following list:

- ☒ Limits of disturbance clearly marked on all construction plans.
- ☒ Mapped soils by Hydrologic Soil Group (HSG).
- ☒ Building envelopes avoid steep slopes, forest stands, riparian corridors, HSG D soils, and floodplains.
- ☒ New lots, to the extent practicable, have been kept out of freshwater and coastal wetland jurisdictional areas.
- ☒ Important natural areas (i.e., undisturbed forest, riparian corridors, and wetlands) identified and protected with permanent conservation easement.
- ☒ Percent of natural open space calculation is provided.
- ☒ Other (describe):

Explain constraints when a strategy is applied and/or proposed alternatives in space below:

Design completely preserves one whole side of the project. Open space is accessed by a community trail system, steep slopes are avoided except in a few isolated locations, natural vegetation is preserved in cul-de-sac and eyebrow islands.

Formatted: Font: 11 pt, Not Bold, Condensed by 0.2 pt

Formatted: Font: 10.5 pt, Condensed by 0.2 pt

Formatted: Font: 10.5 pt, Condensed by 0.2 pt

Formatted: Level 1, Indent: Left: 0", First line: 0", Space After: 6 pt, Border: Top: (No border), Bottom: (No border), Left: (No border), Right: (No border)

Formatted: Font: Arial

Formatted: Font: Arial

B. Preservation of Buffers and Floodplains

☐ Not Applied or N/A. *Use space below to explain why:*

Select from the following:

- ☒ Applicable vegetated buffers of coastal and freshwater wetlands and perennial and intermittent streams have been preserved, where possible.
- ☒ Limits of disturbance included on all construction plans that protect applicable buffers
- ☐ Other (describe):

Explain constraints and/or proposed alternatives in space below:

All lots are located out of wetland and riverbank buffers; limits of disturbance are clearly marked on all plans.

C. Minimized Clearing and Grading

☐ Not Applied or N/A. *Use space below to explain why:*

Select from the following list:

- ☐ Site fingerprinting to extent needed for building footprints, construction access and safety (i.e., clearing and grading limited to 15 feet beyond building pad or 5 feet beyond road bed/shoulder).
- ☒ Other (describe):

Explain constraints and/or proposed alternatives in space below:

Clearing extends beyond houses to construct OWTS, wells, and grade a minimum yard area for each lot.

D. Locating Sites in Less Sensitive Areas

☐ Not Applied or N/A. *Use space below to explain why:*

Select from the following list:

- ☒ A site design process, such as conservation development, used to avoid or minimize impacts to sensitive resources such as floodplains, steep slopes, erodible soils, wetlands, hydric soils, surface waters, and their riparian buffers.
- ☐ Development located in areas with least hydrologic value (e.g., soil groups A and B)
- ☐ Development on steep slopes, grading and flattening of ridges has been avoided to the maximum extent practicable.
- ☐ Other (describe):

Explain constraints and/or proposed alternatives in space below:

The project was developed as a CDS. Sensitive areas have been avoided to the maximum extent practicable. Site soils are uniformly HSG B, thus hydrologic value is not a specific factor. Site itself consists of very steep slopes, and thus, will require significant grading, but the steepest slopes have been avoided.

E. Compact Development

☐ Not Applied or N/A. *Use space below to explain why:*

Select from the following list:

- ☒ A site design technique (e.g., conservation development) used to concentrate development to preserve as much undisturbed open space as practicable and reduce impervious cover.
- ☒ Reduced setbacks, frontages, and right- of- way widths have been used where practicable.
- ☐ Other (describe):

Explain constraints and/or proposed alternatives in space below:

See response to item D, above. Setbacks all reduced. R/W remains at 50 feet per town requirements.

F. Work with the Natural Landscape Conditions, Hydrology, and Soils

☐ Not Applied or N/A. *Use space below to explain why:*

Select from the following list:

- ☒ Stormwater management system mimics pre-development hydrology to retain and attenuate runoff in upland areas (e.g., cuts and fills limited and BMPs distributed throughout site; trees used for interception and uptake).
- ☒ The post-development time of concentration (t_c) should approximate pre-development t_c.
- ☒ Flow velocity in graded areas as low as practicable to avoid soil erosion (i.e., slope grade and/or length minimized). Velocities shall not exceed velocities in Appendix B, Table B-2.
- ☐ Plans show measures to prevent soil compaction in areas designated for Qualified Pervious Areas (QPAs) for better infiltration.
- ☐ Site designed to locate buildings, roadways and parking to minimize grading (cut and fill quantities)
- ☐ Other (describe):

Explain constraints and/or proposed alternatives in space below:

For the most part, the site has been designed to retain natural features. Flow velocities are as low as possible for graded swales, and t_c as long as possible by draining through bioretention facilities and dry swales. QPAs for disconnected rooftop runoff undisturbed were possible in rear yards. Building and driveways located to avoid steep slopes, and street designed to minimize cuts and fills.

2. Strategies to Reduce the Impacts

A. Reduce Impervious Cover

☐ Not Applied or N/A. *Use space below to explain why:*

Select from the following list:

- ☒ Reduced roadway widths
- ☐ Reduce driveway areas
- ☐ Reduced building footprint
- ☐ Reduced sidewalk area
- ☒ Reduced cul-de-sacs
- ☐ Reduced parking lot area
- ☐ Other (describe):

Explain constraints and/or proposed alternatives in space below:

Roads designed with 20 foot paving width; 3-foot shoulders; and swales with 2 foot bottom width, 2.5:1 side slopes and 1 foot depth. Cul-de-sacs are looping lanes or eyebrows with open islands, sidewalks are not proposed, but pedestrian wood-chip trail connects project to undisturbed community open space.

3. Strategies to Manage the Impacts

A. Disconnecting Impervious Area

☐ Not Applied or N/A. *Use space below to explain why:*

Select from the following list:

- ☐ Impervious surfaces have been disconnected to QPAs to the extent possible.
- ☒ Other (describe):

Explain constraints and/or proposed alternatives in space below:

Rooftops from several lots will drain to QPAs but no specific credit has been calculated.

B. Mitigation of Runoff at the point of generation

☐ Not Applied or N/A. *Use space below to explain why:*

Select from the following list:

- ☒ Roof runoff has been directed to a QPA, such as a yard or vegetated area.
- ☒ Roof runoff has been directed to a lower impact practice such as a rain barrel or cistern.
- ☐ A green roof has been designed to reduce runoff.
- ☒ Small-scale BMPs applied at source.
- ☒ Other (describe):

Explain constraints and/or proposed alternatives in space below:

Open section road provided instead of closed section with dry swale.

C. Stream/Wetland Restoration

☒ Not Applied or N/A. *Use space below to explain why:*

Select from the following list:

- ☐ Historic drainage patterns have been restored by removing closed drainage systems and/or restoring degraded stream channels and/or wetlands.
- ☐ Removal of invasive species.
- ☐ Other (describe):

Explain constraints and/or proposed alternatives in space below:

Stream is currently in stable condition, and wetlands are pristine.

D. Reforestation

☐ Not Applied or N/A. *Use space below to explain why:*

Select from the following list:

- ☒ Low maintenance landscaping and native vegetation has been proposed.
- ☒ Trees are proposed to be planted or conserved to reduce runoff volume, increase nutrient uptake, and provide shading and habitat.
- ☐ Other (describe):

Explain constraints and/or proposed alternatives in space below:

E. Source Control

☐ Not Applied or N/A. *Use space below to explain why:*

Select from the following list:

- ☒ Source control techniques such as street sweeping or pet waste management have been proposed.
- ☐ Other (describe):

Explain constraints and/or proposed alternatives in space below:

Aggressive pet waste management will be implemented, and enforced in neighborhood association rules to increase effectiveness of stormwater treatment system.

D.2 Design Example #2: Commercial Site

The Ocean Breeze Marina is a hypothetical marina located in Newport, Rhode Island. The site is approximately 2 acres in size and is immediately adjacent to Rhode Island Sound. The project consists of ~~the redevelopment~~new development of ~~existing~~ parking areas~~,~~ (used for boat storage and maintenance in the off-season), boat yard, and an access road. The immediate drainage area consists of an access road, parking lot, and marina buildings. In addition, drainage from the adjacent area equaling an area of approximately 2.5 acres is conveyed through the site via storm drain.

The project site contains a number physical constraints that impact the design options, including:

- Existing fill within the project site area;
- High groundwater elevation and little available head due to adjacent tidal fluctuations;
- Extremely flat terrain across the site from the existing access drive and parking lot;
- Elevations of the existing drainage system; and
- Poor draining soils across the field.

As a marina, this site is considered a LUHPPL. As such, lined bioretention areas are chosen to treat runoff from the parking lots, as well as the adjacent road. The parking lot runoff enters several on-line bioretention areas via sheet flow over grass filter areas. In addition, one off-line bioretention area accepts both boat yard runoff and the runoff from the adjacent road, which is collected in drainage pipes and conveyed through a proprietary pretreatment device before entering the bioretention through a distribution manifold. A downstream tide gate was incorporated to prevent extreme tides from backing up into the bioretention facilities. This example steps through the design process for the off-line bioretention area, which has a total drainage area of 3.0 acres, with 2.5 impervious acres.

Formatted: Font: Bold

Table D-~~4~~5 Base Data for Ocean Breeze Marina

Formatted Table

Location: Newport, RI
Drainage Area to Off-line Bioretention
Site Area: 3.0 acres
Impervious Area: 2.5 acres
Time of Concentration: 6 minutes
Soils Type: Urban Land

Step 1: Document Site Planning Process in Accordance with Standard 1.

LID measures were incorporated at this ~~redevelopment~~new development site to the maximum extent practicable. For example, impervious surfaces were reduced by decreasing the size of parking spaces, as well as the access road. Rooftop runoff was disconnected to flow into vegetated areas instead of the storm drain system.

Figure D-~~4~~ 14 Plan View of the Site (not to scale)

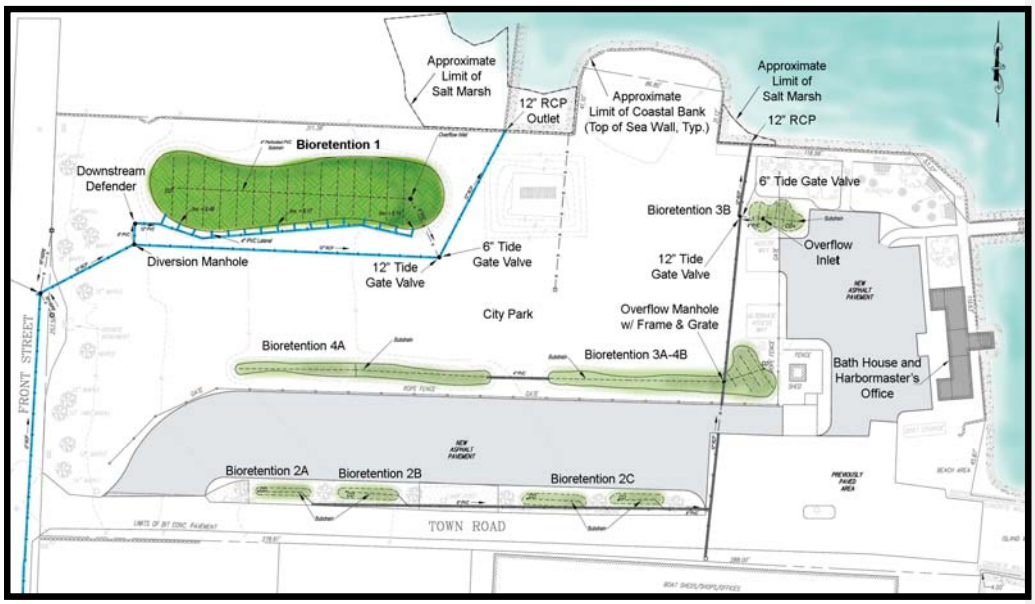

Step 2: Determine Required Design Criteria (i.e., Re_v, WQ_v, CP_v, Q_p)

- Re_v: The whole site is considered a LUHPPL since the parking area is used for boat storage and maintenance, so stormwater cannot be infiltrated.
- WQ_v: The WQ_v will be treated with bioretention areas.
- CP_v: The CP_v does not need to be managed because the site discharges to a tidally influenced waterbody.
- Q_p: The Q_p does not need to be managed because the site discharges to a tidally influenced waterbody.
- A downstream analysis is not required because the ~~site~~disturbed area is smaller than 5 acres.

Step 3: Compute Required Design Volumes (WQ_v)

WQ_v = [(1.0") (I)] / 12
= [(1.0 in) (2.5 ac) (1ft/12in)
= 0.~~21~~208 ac-ft

Bioretention will be designed with an impermeable liner to protect groundwater from the stormwater pollutants at this LUHPPL. Total WQ_v to be treated by the bioretention facility is: WQ_v = 0.~~21~~208 ac-ft = 9,~~150~~075 ft^3.

Formatted: No widow/orphan control

Step 4: Determine if the development site and conditions are appropriate for the use of a bioretention area.

Site Specific Data:

Existing ground elevation at practice location is 6.25 ft, mean sea level. Soil boring observations reveal that the seasonally high water table is at elevation 0.5 ft and underlying soil is urban fill. A 3-ft separation distance from the seasonally high water table is not required for this site since the bioretention is not designed to infiltrate to the underlying soils. Thus, bioretention is an acceptable BMP for this site.

Step 5: Confirm local design criteria and applicability.

There are no additional local criteria that must be met for this design.

Step 6: Determine size of bioretention filter area.

Use sizing equation and values provided in Section 5.5.4:

$$A_f = (WQ_v)(d_f) / [(k)(h_f + d_f)(t_f)]$$

Where:
- A_f = surface area of filter bed (ft^2)
- d_f = filter bed depth (ft) (use 2 ft given physical constraints at the site)
- k = coefficient of permeability of filter media (ft/day)
- h_f = average height of water above filter bed (ft) (max ~~6~~9 in allowed, so ave = 0.~~2~~375ft)
- t_f = design filter bed drain time (days) (2 days is recommended)

Formatted: Tab stops: 1.5", Left

A_f = (9,~~150~~075 ft^3) (2 ft) / [(1 ft /day) (0.~~2~~375ft + 2 ft) (2 days)] (With d_f = 2 ft, k = 1.0 ft /day, h_f = 0.25ft, t_f = 2 days)

A_f = ~~4,070~~3,821 ft^2

The Bioretention facility must have a minimum surface area of 3,821 ft^2 and a volume equal to at least ¾ of the WQ_v, including the forebay volume (per requirements in Chapter Five). WQ_v = 9,075 ft^3, min Vol = 0.75(9,075 ft^3) = 6,806.3 ft^3

With a 9" ponding depth and 2.0 media depth, calculate available storage above and within the facility: surface ponding Vol @ depth of 0.75 ft = 3,152 ft^3. Vol of voids within media = 3,821 ft^2 (2.0 ft) (0.33) = 2,522 ft^3. Total volume = 3,152 + 2,522 = 5,674 ft^3 < 6,806 ft^3. (too small - due to the shallow depth associated with the groundwater constraint).

Increase minimum surface area to 4,500 ft^2 and maintain maximum ponding depth of 0.75 ft. Available surface storage at ponding depth of 0.75 ft = 3,881 ft^3. Volume of voids within media = 4,500 ft^2 (2.0 ft) (0.33) = 2,970 ft^3. Total volume = 3,881 + 2,970 = 6,851 ft^3 > 6,806 ft^3. OK.

Step 7: Set design elevations and dimensions.

Given a filter area requirement of 4,~~070~~500 ft^2 and the dimensions of available area, say facility is roughly ~~23~~25 ft by ~~182~~180 ft. Set top of ~~facility~~the bioretention surface at elev. 5.~~25~~0 ft, with the top of berm at elevation 6.25 ft.

Step 8: Design conveyance to facility.

Stormwater treatment practices can be either on or off-line. On-line facilities are generally sized to receive, but not necessarily treat, larger storms. Off-line facilities are designed to receive a more or less exact flow rate through a weir, channel, manhole "flow splitter", etc. When flow is directed via a pipe system, as is the case here, it must be designed as off-line (see Section 5.~~52~~5.2). The facility in this example is situated to receive only the WQ_v via a flow splitter in the existing storm drain network.

To design a flow splitter for this offline bioretention area, refer to Section 3.3.3.2 for guidance on Water Quality Peak Flow Calculation.

Using the water quality volume (WQ_v), a corresponding Curve Number (CN) is computed utilizing the following equation:

$$CN = 1000 / [10 + 5P + 10Q - 10(Q^2 + 1.25\ Q*P)^{1/2}]$$

Where P = rainfall, in inches (use 1.2 inches)

Q = runoff volume, in inches (equal to $WQ_v \div$ area)

Q = (0.21 ac-ft) (12 inches/ft) / (3.0 acres) = 0.84 inches

$$CN = 1000 / [10 + 5(1.2\ in) + 10\ (0.84\ in) - 10((0.84\ in)^2 + 1.25\ (0.84\ in)(1.2\ in))^{1/2}]$$

$$CN = 1000 / [10 + 6.0 + 8.4 – 14.02] = 96.3$$

The time of concentration (t_c) is 6 min (0.1 hr).

Read initial abstraction (Ia) from TR-55 Table 4-1 or calculate Ia = 200/CN - 2 = 0.077

Compute Ia/P = 0.077 / 1.2 in = 0.064

Approximate the unit peak discharge (q_u) from TR-55 Exhibit 4-III for appropriate t_c.
q_u = 660 csm/in

Using the water quality volume (WQ_v), compute the peak discharge (Q_{peak})

$$Q_{peak} = q_u * A * WQ_v$$

where Q_{peak} = the peak discharge, in cfs
q_u = the unit peak discharge, in cfs/mi²/inch (670 csm/in)
A = drainage area, in square miles (0.0047 sq miles)
WQ_v = Water Quality Volume, in watershed inches (0.84 inches)

Q_{peak} = 660 * 0.0047 * 0.84 = 2.61 cfs

Use the orifice equation to size pipe to bioretention area. $Q_{peak} = CA(2gh)^{1/2}$

where:
C = discharge coefficient (0.6)
A = cross-section area of orifice ($D^2/4*\pi$)
g = acceleration due to gravity (32.2 ft/s^2)
h = head, height above center of the orifice (assume 2 ft)

$A = Q_{peak} / [C * (2gh)^{1/2}] = 2.61 \text{ cfs} / [0.6 * (2*32.2 \text{ ft/s}^2 * 2 \text{ ft})^{1/2}] = 0.38 \text{ ft}^2$
Diameter = $[(0.38 \text{ ft}^2) * 4 / \cancel{\pi}\pi]^{1/2}$ = 0.7 ft (12 in/ft) = 8.4 in. Use 10 in pipe.
(Note, could provide an orifice plate within the structure with an 8.4-inch diameter opening, but a 10-inch pipe will carry more flow than the design, so it is conservative)

Step 9: Design pretreatment.

Pretreatment provided with proprietary swirl-concentrator according to manufacturer's instructions. Flow is then distributed along the length of the bioretention area with a PVC manifold to prevent erosion at one inlet location and to ensure equal distribution of stormwater to reach all areas of the bioretention.

Step 10: Overflow design.

Since the bioretention is designed as an off-line practice sized to treat only the WQ_v, it theoretically should not overflow~~.~~ (see Figure D-15). However, should filtering rates become reduced due to facility age or poor maintenance, an overflow weir should be provided to prevent inadvertent overflows. The overflow weir elevation is set so that a maximum of ~~6~~9 inches of ponding occurs above the bottom of the bioretention area. In this case, the overflow weir is set at 5.75 ft.

Formatted: Stormwater Figure, Don't keep lines together, Tab stops: Not at 0" + 0.5" + 1" + 1.5" + 2" + 2.5" + 3" + 3.5" + 4" + 4.5" + 5" + 5.5" + 6"

Formatted: Font: 12 pt

Figure D-15 Flow Splitter Design

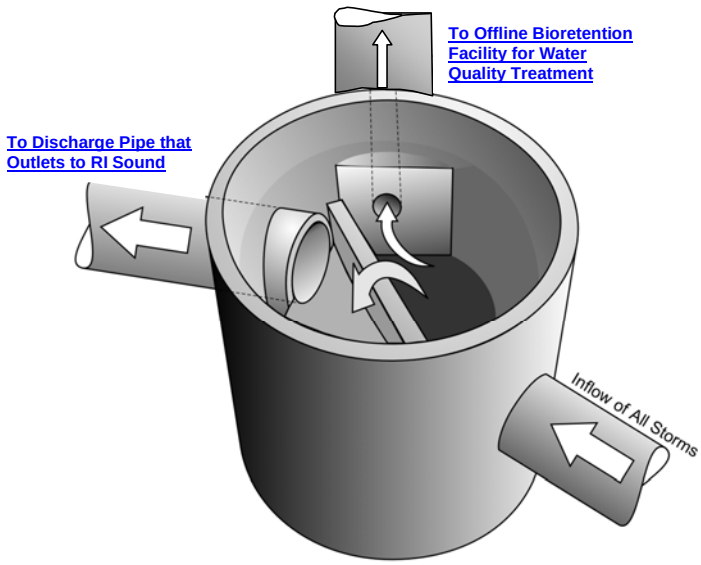

Step 11: Choose plants for planting area.

Choose plants based on factors such as whether native or not, tolerance to salt spray and wind, resistance to drought and inundation, cost, aesthetics, maintenance, etc. Select species locations (i.e., on-center planting distances) so species will not "shade out" one another. Do not plant trees and shrubs with extensive root systems near pipe work. Planting guidelines for this practice are presented in Appendix B.

Figure D-~~5 Flow Splitter Design~~

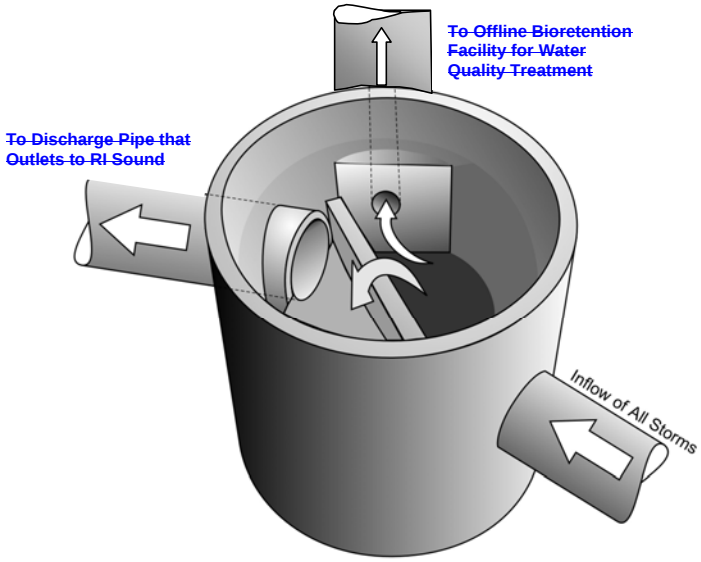

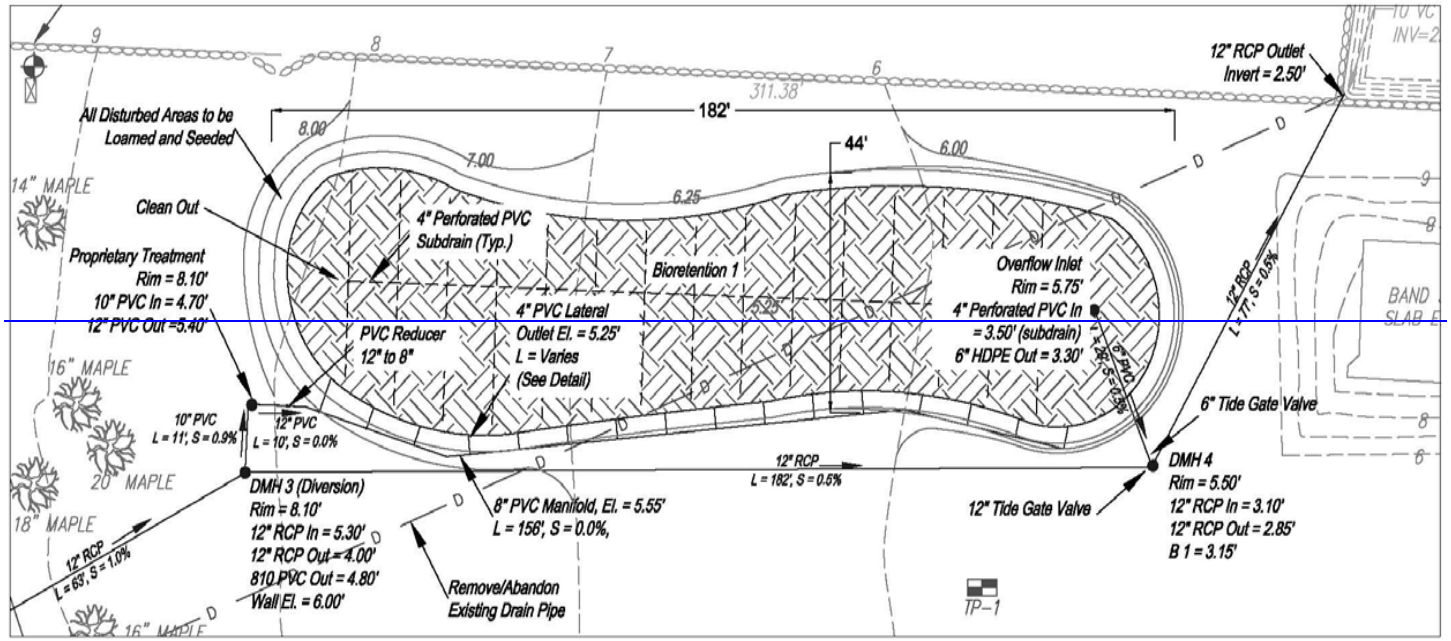

~~Figure D-6~~16 **Plan View of Off-line Bioretention Facility**

~~Case Study~~

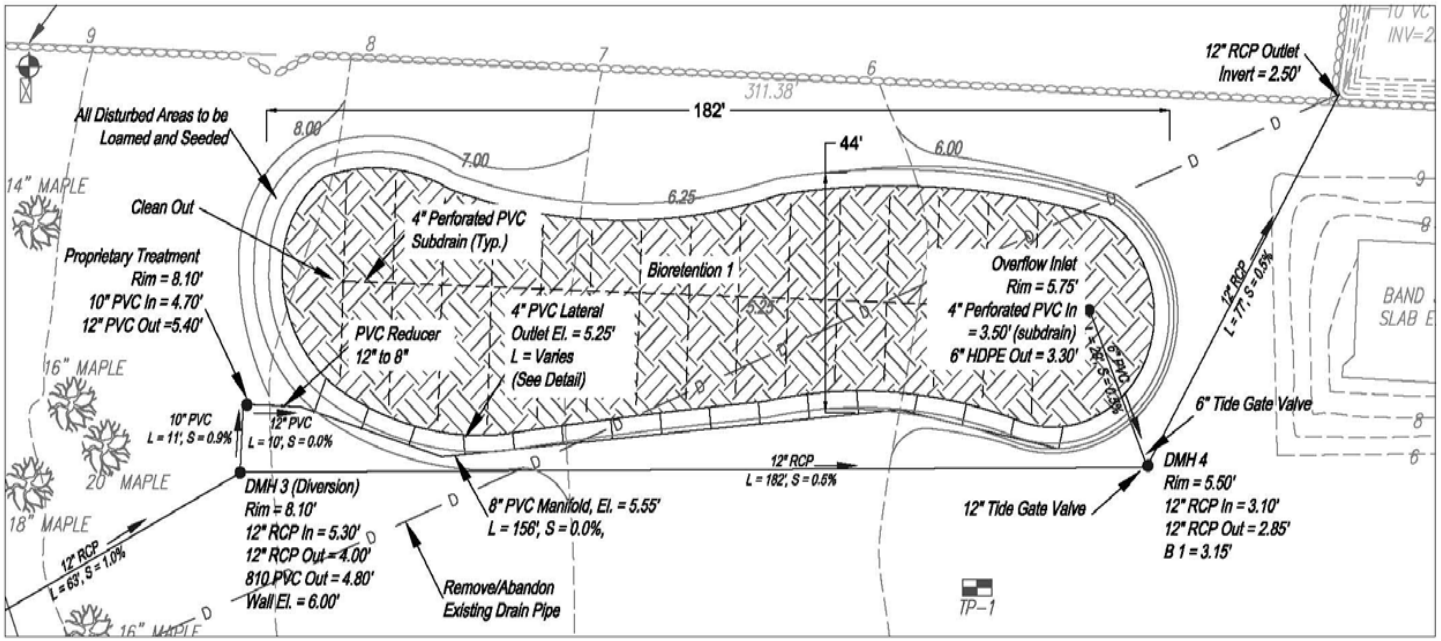
All Disturbed Areas to be Loamed and Seeded
Clean Out
Proprietary Treatment
Rim = 8.10'
10" PVC In = 4.70'
12" PVC Out =5.40'
4" Perforated PVC Subdrain (Typ.)
PVC Reducer 12" to 8"
4" PVC Lateral Outlet El. = 5.25' L = Varies (See Detail)
Bioretention 1
Overflow Inlet
Rim = 5.75'
4" Perforated PVC In = 3.50' (subdrain)
6" HDPE Out = 3.30'
12" RCP Outlet Invert = 2.50'
182'
44'
311.38'
8.00
7.00
6.25
6.00
5.25
14" MAPLE
16" MAPLE
20" MAPLE
18" MAPLE
10" PVC L = 11', S = 0.9%
12" PVC L = 10', S = 0.0%
DMH 3 (Diversion)
Rim = 8.10'
12" RCP In = 5.30'
12" RCP Out = 4.00'
810 PVC Out = 4.80'
Wall El. = 6.00'
12" RCP L = 63', S = 1.0%
8" PVC Manifold, El. = 5.55' L = 156', S = 0.0%,
Remove/Abandon Existing Drain Pipe
12" RCP L = 182', S = 0.5%
12" RCP L = 77', S = 0.5%
6" PVC
6" Tide Gate Valve
12" Tide Gate Valve
DMH 4
Rim = 5.50'
12" RCP In = 3.10'
12" RCP Out = 2.85'
B 1 = 3.15'
TP-1
BAND SLAB E

D.3 DESIGN EXAMPLE #3: SINGLE-FAMILY RESIDENTIAL SITE

The final example demonstrates how a single-family home site can be designed to manage stormwater. The BMPs covered in this example include a cistern, bioretention area, permeable pavers, and a dry swale. For further guidance on small site stormwater BMPs, designers are encouraged to consult the State of Vermont, Department of Environmental Conservation "Small Sites Guide for Stormwater Management" at http://www.vtwaterquality.org/stormwater.htm.

Formatted: Font: 8 pt

Figure D-~~7~~17 Various Options for Managing Stormwater from a Single-family Home

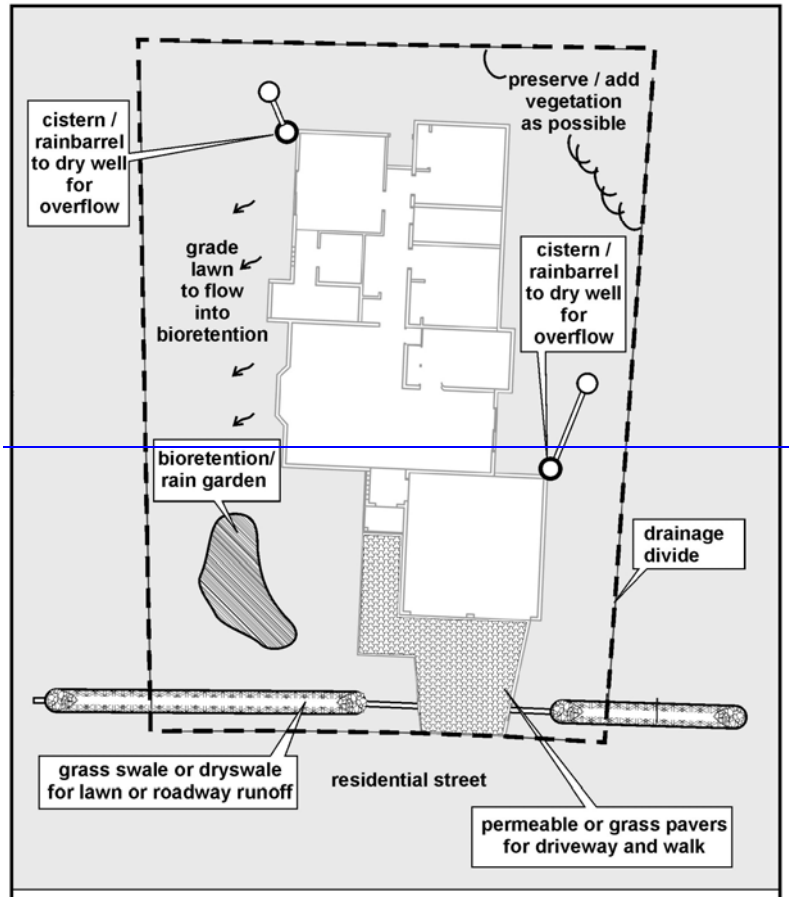

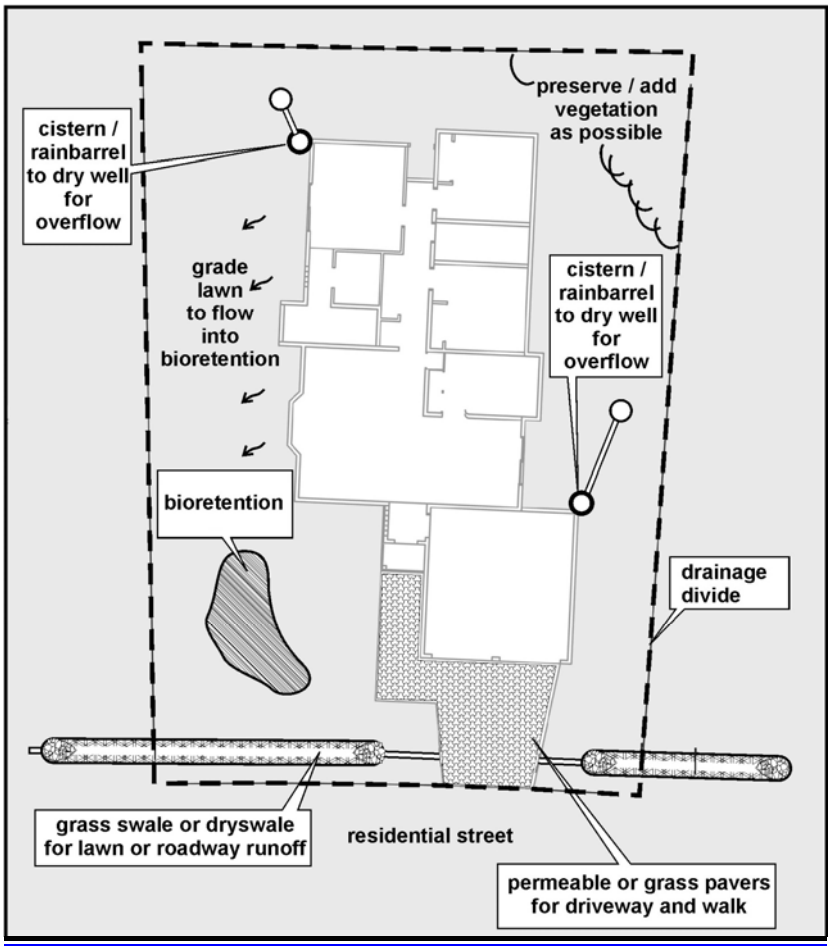

Site Area: 0.25 acres
Impervious Area: 0.08 acres
Soils Type: HSG "B"

D.3.1 Cistern and Drywell

The first part of this example focuses on the design of a cistern and a drywell to intercept rooftop runoff for a single family home. This example shows how the recharge requirements for this portion of the site will be met by cisterns that overflow to drywells. In general, the primary function of cisterns is to capture and store rooftop runoff that can be used at a later time. A drywell is a single infiltration chamber; in this case, it is intended to accept overflow from the cistern in larger rain events, or when the cistern is already full from a previous storm event. Both the cistern and the drywell help to reduce peak flows leaving the site, thus helping to meet channel protection and peak control requirements. Cisterns are only optional – since rooftop runoff does not need to be

Formatted: Font: 11 pt
Formatted Table
Formatted: Font: 11 pt
Formatted: Font: 11 pt
Formatted: Font: 12 pt

treated, it can discharge directly into the ground via drywells, with the volume counting towards both recharge and water quality requirements.

Figure D-~~8~~18 Detail of Cistern and Drywell

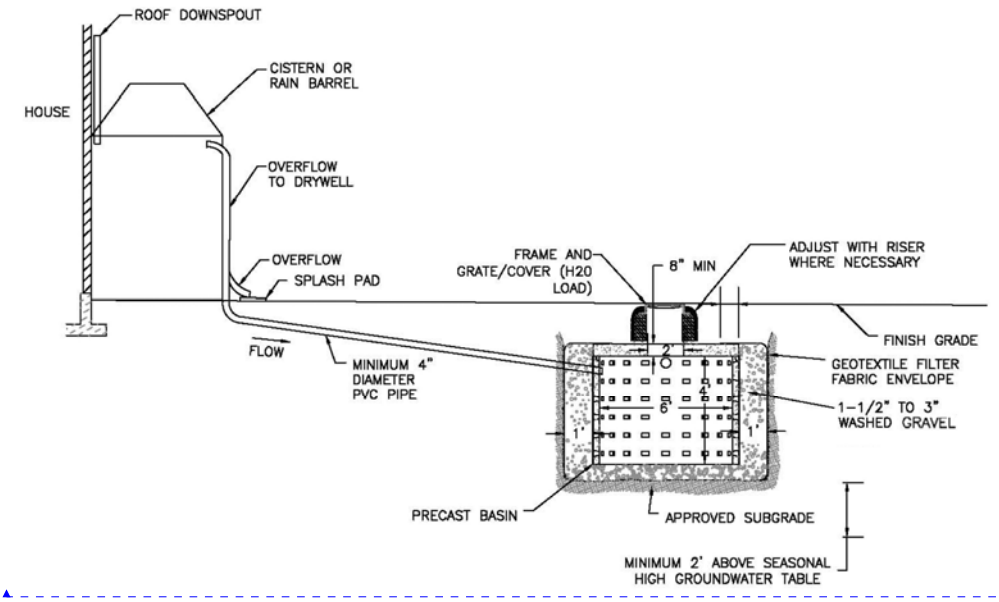

Step 1:	**Compute the Recharge Volume (Re_v) and Water Quality Volume (WQ_v)**

Recharge, Re_v
The site is located HSG "B" soils.

Re_v = [(1") (F) (I)] / 12
= [(1.0 in) (0.35) (0.08 ac)] * (1 ft /12 in)
= 0.002 ac-ft = 102 ft^3

Water Quality Volume, WQ_v

WQ_v = [(1.0 in) (I)] / 12
= [(1.0 in) (0.08 ac)] * (1 ft /12 in)
= 0.007 ac-ft = 290 ft^3

The cistern should be sized for the larger volume to meet both requirements.

Step 2:	**Size the cistern and drywell.**

Formatted: Font: 12 pt

Formatted: Normal,Normal-swmanual

Cisterns are only optional, but for this example, they will be used as a supplemental water source for the house. For this example, two cisterns (see Figure D-~~7~~17) will be sized to handle the water quality volume from the house roof using the following equation recommended by the Low Impact Development Center, Inc. (http://www.lid-stormwater.net):

Field Code Changed

Vol = A * P * 0.90 * 7.5 gals/ ft^3

Where:

Vol = Volume of rain barrel or cistern (gallons)
A = Impervious surface area draining into cistern (ft^2)
P = Precipitation (ft)
0.90 = fraction of total volume used by system (unitless)
7.5 = conversion factor (gallons per ft^3)

The total roof area draining to the cisterns is 2,300 ft^2; thus, Vol = (2,300 ft^2) (0.083 ft) (0.9) (7.5) = 1,289 gallons required. Divide by 2 since flow will be diverted to two cisterns = 644 gallons. Thus, use two (2) 1,000-gallon tanks with an overflow to a drywell for recharge.

The drywell can be sized by following the infiltration trench sizing approach in Section 5.3.4.

Step 3: Select additional BMPs to treat runoff from the site.

There are many structural and non-structural ways that a single-family home can meet stormwater requirements. Additional structural BMPs that could be utilized for this site are shown in Figure D-~~7~~17 and described below.

D.3.2 Bioretention

The step-by-step example in ~~Section~~Sections D.1 and D.2 show~~s~~ how bioretention areas can be designed to provide water quality treatment, recharge, and in some instances peak flow controls. In this particular example, the bioretention area is treating runoff from the yard and paved areas, although they can also be designed to capture rooftop runoff.

D.3.3 Permeable Pavers

Permeable pavers (as described in Section 5.4) can be used in the driveway and walkway areas associated with the single family home. In general, permeable pavers are designed to promote recharge and decrease peak flows. Figure D-9 is a typical detail for permeable pavers. For more information on specifications and installation, visit the Interlocking Concrete Pavement Institute at ~~http://www.icpi.org/~~http://www.icpi.org/.

Figure D-19 Detail of Permeable Pavers

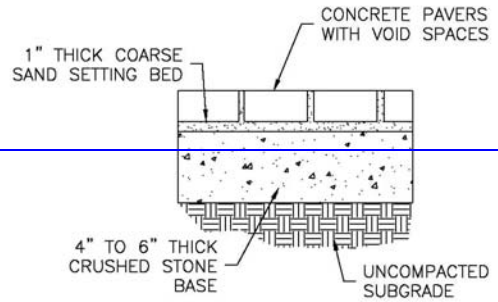

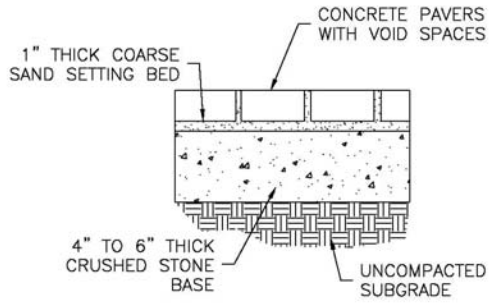

D.3.4 Swale

A dry swale can be used along the road to collect the overflow from the bioretention area, driveway, and walkways. Dry swales can help meet recharge, water quality, and water quantity requirements for the site. See Section D.1 for a detailed design example.

~~<This~~

<Page ~~Intentionally Left Blank>~~

left blank intentionally>

APPENDIX E: GUIDANCE FOR DEVELOPING OPERATION AND MAINTENANCE PLANS

An essential component of a successful stormwater system is the ongoing operation and maintenance of the various components of the stormwater drainage, control, and conveyance systems. Failure to provide effective maintenance can reduce the hydraulic capacity and the pollutant removal efficiency of stormwater practices.

Many people expect that stormwater facilities will continue to function correctly as designed forever. However, it is inevitable that deterioration of the stormwater infrastructure will occur once it becomes operational. The question is not whether stormwater management system maintenance is necessary~~.~~ but how often. Ideally, a program should address operation~~s~~ and maintenance concerns proactively instead of reacting to problems that occur such as flooding or water quality degradation associated with erosion, clogging, or outright failure of one or more practices. Thus, on-going maintenance is a vital part of ensuring the operational success of stormwater management facilities and is critical to achieving an extended service life of continuous operation as designed.

There are two key components to adequately maintaining a stormwater management infrastructure:

- Periodic and scheduled inspections, and
- Maintenance scheduling and performance.

This appendix offers guidance for developing operation and maintenance plans for a development site to help an applicant meet Standard 11. In addition, sample checklists are provided that can be used during maintenance inspections to ensure that all aspects of a constructed BMP are inspected. For specific maintenance requirements for each BMP, designers should refer to the applicable sections in Chapters Five, Six, and Seven.

Inspections

It is clear that an inspection program is necessary to ensure a stormwater facility remains operational. Inspections should be performed on a regular basis and scheduled based on the stormwater control type and characteristics. In addition, inspections should occur after major rainfall events for those components deemed to be critically affected by the resulting runoff. Not all inspections can be conducted by direct human observation. For subsurface systems, video equipment may be required. There may be cases where other specialized equipment is necessary. The inspection program should be tailored to address the operational characteristics of the system.

It is not mandatory that all inspectors be trained engineers, but they should have some knowledge or experience with stormwater systems. ~~Trained~~In general, trained

Formatted: Font: Arial, Not Bold

Formatted: Normal,Normal-swmanual

Formatted Table

Formatted: Font: 10 pt

stormwater engineers should, however, direct them. Inspections by registered engineers should be performed where routine inspection has revealed a question of structural or hydraulic integrity affecting public safety.

The inspection process should document observations made in the field and should cover structural conditions, hydraulic operational conditions, evidence of vandalism, condition of vegetation, occurrence of obstructions, unsafe conditions, and build-up of trash, sediments and pollutants. This is also an efficient way to take water quality measurements required for monitoring programs and to incorporate them into the inspection history.

Maintenance Scheduling and Performance

Maintenance activities can be divided into two types: scheduled and corrective. Scheduled maintenance tasks are those that are typically accomplished on a regular basis and can generally be scheduled without referencing inspection reports. These items consist of such things as vegetation maintenance (such as mowing) and trash and debris removal. These tasks are required at well-defined time intervals and ~~can~~should be considered a ~~given~~requirement for most, if not all, stormwater structural facilities. A maintenance crew is typically ~~put under~~given a fixed scope of responsibility to address these items.

Corrective tasks consist of items such as sediment removal, stream bank stabilization, and outlet structure repairs that are done on an as-needed basis. These tasks are typically scheduled based on inspection results or in response to complaints. Corrective maintenance sometimes calls for more specialized expertise and equipment than ~~for~~ scheduled tasks. For example, a task such as sediment removal from a stormwater basin requires specialized equipment for which not every jurisdiction is willing to invest. Therefore, some maintenance tasks might be effectively handled on a contract basis with an outside entity specializing in that field. In addition, some corrective maintenance may also require a formal design and bid process to accomplish the work.

The following section describes appropriate maintenance and inspection activities for the acceptable best management practices.

E.1 Maintenance Descriptions and Guidance

A stormwater control system should be regularly inspected to ensure proper performance and to prevent deficiencies in the effectiveness of the systems due to sediment build-up, damage, or deterioration. The following operation and maintenance provisions should be provided:

E.1.1 Stormwater Basins and WVTSs

General inspections should be conducted on an annual basis and after storm events ~~of~~ greater than or equal to the 1-year, 24-hour (Type III) precipitation event. Areas with a permanent pool should be inspected on a semi-annual basis. The maintenance

Formatted Table

Formatted: Font: 10 pt

objectives for these practices include~~s~~ preserving the hydraulic and removal efficiency of the basin or WVTS and maintaining the structural integrity.

The slopes of the basin or WVTS should be inspected for erosion and gullying. Reinforce existing riprap if riprap is found to be deficient, erosion is present at the outfalls of any control structures, or the existing riprap has been compromised. All structural components, which include, but are not limited to, trash racks, access gates, valves, pipes, weir walls, orifice structures, and spillway structures, should be inspected and any deficiencies should be reported. This includes a visual inspection of all stormwater control structures for damage and/or accumulation of sediment. Sediment should be removed from the forebay when design depth has been reduced by 50%. All material, including any trash and/or debris from all areas within the extents of the basin or WVTS area including trash rack and flow control structures, should be disposed of in accordance with all federal and local regulations.

Any areas within the extents of the stormwater facility that are subject to erosion or gullying should be replenished with the original design material and re-vegetated according to design drawings. Slope protection material sh~~a~~oul~~l~~d be placed in areas prone to erosion~~, in accordance with the above specifications.~~. Embankment stability sh~~a~~oul~~l~~d be inspected for seepage and burrowing animals.

Mow the grass around the perimeter of the basin or WVTS at least 4 times annually. Vegetation along the maintenance access roads should be mowed annually. Prune all dead or dying vegetation within the extents of the basin or WVTS, remove all herbaceous vegetation root stock when overcrowding the maintenance access to the facility, remove any vegetation that has a negative impact on stormwater flowage through the facility, and trim any overgrown vegetation within the basin. Any invasive vegetation encroaching upon the perimeter of the facility sh~~a~~oul~~l~~d be pruned or removed if it is prohibiting access to the facility, compromising sight visibility and/or compromising original design vegetation. Replace any/all original vegetation that has died off or has not fully established, as determined at the time of the inspection. WVTS vegetation should be reinforced to its original design standards if less than 50% of the original vegetation is established after two years.

E.1.2 Infiltration

Infiltration facilities should be inspected annually to ensure that design infiltration rates are being met. If sediment or organic debris build-up has limited the infiltration capabilities (infiltration basins) to below the design rate, the top 6 inches should be removed and the surface roto-tilled to a depth of 12 inches. The basin bottom should be restored according to original design specifications. Any oil or grease found at the time of the inspection should be cleaned with oil absorption pads and disposed of in an approved location.

Inspect facility for signs of wetness or damage to structures and note any eroded areas. If dead or dying grass on the bottom is observed, check to ensure that water percolates 2-3 days following storms. Mow and remove litter and debris. Stabilize eroded banks

Formatted Table

Formatted: Font: 10 pt

and repair undercut and eroded areas at inflow and outflow structures. Vegetation along the maintenance access roads should be mowed annually.

E.1.3 Permeable Pavement

Permeable pavements performing as infiltration practices require regular vacuum sweeping or hosing (minimum every three months or as recommended by manufacturer) to keep the surface from clogging. Maintenance frequency needs may be more or less depending on the traffic volume at the site. The site should be inspected regularly to ensure that the paving surface drains properly after storms. Inspect the surface annually for deterioration or spalling. If surface needs to be repaired, ensure that it is not repaved or resealed with impermeable materials.

Maintenance activities include the following: minimize use of sand and salt in winter months, keep adjacent landscape areas well maintained and stabilized (erosion gullying quickly corrected), post signs identifying permeable pavement, mow and reseed grass pavers as needed, and add joint material (e.g., sand) periodically to replace material that has been transported from paving stones/bricks. Attach rollers to the bottoms of snowplows to prevent them from catching on the edges of grass pavers and some paving stones.

E.1.4 Filters

Sand Filters

Sand filters should be inspected annually and after storm events ~~of~~ greater than or equal to the 1-year, 24-hour (Type III) precipitation event. Open the access covers of the underground sand filters and make a visual inspection to determine the extents of maintenance necessary to rehabilitate the sand filter to its original design standards.

Proceed with the following if half of the entire sediment chamber depth is found to be full of sediment at the time of the inspection. All oil, sludge, sediment, solids, trash, debris and floatable material should be removed from all chambers of the sand filter. All stormwater within an underground sand filter sh~~a~~oul~~l~~d be pumped out of the facility by means of a vactor truck. All remaining oil and grit sh~~a~~oul~~l~~d be removed from the face of the exposed concrete within the perimeter sand filter, including but not limited to the wet storage chamber, sand filter chamber and overflow chamber.

Materials deposited on the surface of the sand filter (e.g., trash and litter) should be removed manually. Clean-out sh~~a~~oul~~l~~d be accomplished via catch vac or vactor truck. After cleaning, the cover and grate are to be reset and all resulting waste including oil, sludge, sediment, and water should be disposed of in accordance with all applicable federal and local regulations.

If standing water is observed more than 48 hours after a storm event, then the top 6 inches of sand should be removed and replaced with new materials. If discolored or contaminated material is found below this removed surface then that material should also be removed and replaced until all contaminated sand has been removed from the

Formatted Table

Formatted: Font: 10 pt

filter chamber. The sand should be disposed of in accordance with all applicable federal and local regulations.

All structural components, which include the outlet structure, valves, pipes, frame and grate, cover, underdrain system, and structural concrete, should be inspected and any deficiencies sh~~a~~oul~~l~~d be reported.

Bioretention

Inspections are an integral part of system maintenance. During the six months immediately after construction, bioretention facilities should be inspected at least twice or more following precipitation events of at least 1.0 inch to ensure that the system is functioning properly. Thereafter, inspections should be conducted on an annual basis and after storm events of greater than or equal the 1-year, 24-hour (Type III) precipitation event.

Minor soil erosion gullies should be repaired when they occur. Pruning or replacement of woody vegetation should occur when dead or dying vegetation is observed. Separation of herbaceous vegetation ~~root shock~~rootstock should occur when over-crowding is observed, or approximately once every 3 years. The mulch layer should also be replenished (to the original design depth) every other year, as directed by inspection reports. The previous mulch layer should be removed, and properly disposed of, or roto-tilled into the soil surface. If at least 50 percent vegetation coverage is not established after two years, a reinforcement planting should be performed. If the surface of the bioretention system becomes clogged to the point that standing water is observed on the surface 48 hours after precipitation events, the surface should be roto-tilled or cultivated to breakup any hard-packed sediment and then re-vegetated. Vegetation along the maintenance access roads should be mowed annually.

E.1.5 Open channels

The maintenance objective for this practice includes preserving the hydraulic and removal efficiency of the channel and maintaining a dense, healthy vegetative cover. The following activities are recommended on an annual basis or as needed:

- Mowing and litter and debris removal;
- Stabilization of eroded side slopes and bottom;
- Nutrient and pesticide use management;
- De-thatching swale bottom and removal of thatching; and
- Discing or aeration of swale bottom.

Every five years, scraping of the channel bottom and removal of sediment to restore original cross section and infiltration rate, and seeding to restore ground cover is recommended.

Formatted Table

Formatted: Font: 10 pt

Dry swales should be inspected on an annual basis and ~~just~~ after storms of greater than or equal to the 1-year, 24-hour (Type III) precipitation event. Both the structural and vegetative components should be inspected and repaired. When sediment accumulates to a depth of approximately 3 inches, it should be removed, and the swale should be reconfigured to its original dimensions. The ~~grass~~vegetation in the dry swale should be mowed ~~at least 4 times during~~as required to maintain heights in the ~~year.~~4-6 inch range, with mandatory mowing once heights exceed 10 inches. If the surface of the dry swale becomes clogged to the point that standing water is observed ~~in~~on the surface 48 hours after precipitation events, the bottom should be roto-tilled or cultivated to break up any hard-packed sediment, and then reseeded. Trash and debris should be removed and properly disposed of.

Wet swales should be inspected annually and after storms of greater than or equal to the 1-year precipitation event. During inspection, the structural components of the system, including trash racks, valves, pipes and spillway structures, should be checked for proper function. Any clogged openings should be cleaned out and repairs should be made where necessary. Embankments should be checked for stability, and any burrowing animals should be removed~~.~~ according to State or local Animal Control requirements. Vegetation along the maintenance access roads should be mowed annually. Woody vegetation along those surfaces should be pruned where dead or dying branches are observed, and reinforcement plantings should be planted if less than 50 percent of the original vegetation establishes after two years. Sediment should be removed from the bottom of the swale.

Formatted Table

Formatted: Font: 10 pt

E.2 Best Management Practices Operation, Maintenance, and Inspection Checklists

This section includes sample checklists that can be used during maintenance inspections to ensure that all aspects of a constructed BMP are inspected. These checklists should be modified for a specific BMP that may or may not need all of the maintenance items shown here.

Stormwater Basin/WVTS Operation, Maintenance, and Management Inspection Checklist

Project

Location:

Site Status:

Date:

Time:

Inspector:

Maintenance Item	Satisfactory/ Unsatisfactory	Comments
1. Embankment and emergency spillway (Annual, After Major Storms)		
1. Vegetation and ground cover __ adequate		
2. Embankment erosion		
3. Animal burrows		
4. Unauthorized planting		
5. Cracking, bulging, or sliding of _____ dam		
a. Upstream face		
b. Downstream face		

Formatted Table

Formatted Table

Formatted Table

Formatted: Font: 10 pt

Maintenance Item	Satisfactory/ Unsatisfactory	Comments
c. At or beyond toe		
downstream		
upstream		
d. Emergency spillway		
6. Basin, toe & chimney drains clear and functioning		
7. Seeps/leaks on downstream face		
8. Slope protection or riprap failure		
9. Vertical/horizontal alignment of top of dam "As-Built"		
10. Emergency spillway clear of obstructions and debris		
~~11. Other (specify)~~		
2. Riser and principal spillway (Annual~~)~~, After Major Storms)		
Type: Reinforced concrete _____ Corrugated pipe _____ Masonry _____ 1. Low-flow orifice obstructed		
2. Low-flow trash rack. a. Debris removal necessary		
b. Corrosion control		
3. Weir trash rack maintenance a. Debris removal necessary		
b. corrosion control		

Formatted Table

Formatted Table

Formatted Table

Formatted: Font: 10 pt

Maintenance Item	Satisfactory/ Unsatisfactory	Comments
4. Excessive sediment accumulation inside riser		
5. Concrete/masonry condition riser and barrels a. cracks or displacement		
b. Minor spalling (<1")		
c. Major spalling (rebars exposed)		
d. Joint failures		
e. Water tightness		
6. Metal pipe condition		
7. Control valve a. Operational/exercised		
b. Chained and locked		
8. Basin drain valve a. Operational/exercised		
b. Chained and locked		
9. Outfall channels functioning		
~~10. Other (specify)~~		
3. Permanent Pool (WVTS/Wet Basins) (Semi-annually)		
1. Undesirable vegetative growth		
2. Floating or floatable debris removal required		
3. Visible pollution		

Formatted Table

Formatted Table

Formatted Table

Formatted: Font: 10 pt

Maintenance Item	Satisfactory/ Unsatisfactory	Comments
4. Shoreline problem		
5. Other (specify)		
4. Sediment Forebays (Semi-annually)		
1. Sedimentation noted		
2. Sediment cleanout when depth < 50% design depth		
5. Dry Basin Areas (Annual, After Major Storms)		
1. Vegetation adequate		
2. Undesirable vegetative growth		
3. Undesirable woody vegetation		
4. Low-flow channels clear of obstructions		
5. Standing water or wet spots		
6. Sediment and/or trash accumulation		
~~7. Other (specify)~~		
6. Condition of Outfalls (Annual , After Major Storms)		
1. Riprap failures		
2. Slope erosion		
3. Storm drain pipes		
4.Endwalls / Headwalls		
5. Other (specify)		

Formatted Table

Formatted Table

Formatted Table

Formatted Table

Formatted Table

Formatted: Font: 10 pt

Maintenance Item	Satisfactory/ Unsatisfactory	Comments
7. Other (Semi-annually)		
1. Encroachment on basin, WVTS or easement area		
2. Complaints from residents		
3. Aesthetics a. Grass growing required		
b. Graffiti removal needed		
c. Other (specify)		
4. Conditions of maintenance access routes.		
5. Signs of hydrocarbon build-up		
6. Any public hazards (specify)		
8. Emergent Vegetation _____(Annual)		
1. Vegetation healthy and growing WVTS maintaining 50% surface area coverage of emergent plants after the second growing season. (If unsatisfactory, reinforcement plantings needed)		
2. Dominant emergent plants: Survival of desired emergent plant species Distribution according to plandscapting plan?		
3. Evidence of invasive species		
4. Maintenance of adequate water depths for desired emergent plant species		

Formatted Table

Formatted Table

Formatted Table

Formatted Table

Formatted: Font: 10 pt

Maintenance Item	Satisfactory/ Unsatisfactory	Comments
5. Harvesting of emergent plantings needed		
6. Have sediment accumulations reduced pool volume significantly or are plants "choked" with sediment		
7. Eutrophication level of the WVTS.		
~~8. Other (specify)~~		

Formatted Table

Comments:

Actions to be Taken:

Formatted Table

Formatted: Font: 10 pt

Infiltration System Operation, Maintenance, and Management Inspection Checklist

Project:

Location:

Site Status:

Date:

Time:

Inspector:

MAINTENANCE ITEM	SATISFACTORY / UNSATISFACTORY	COMMENTS
1. Debris Cleanout (~~Semi-annually)~~Annual)		
Trench/chamber or basin surface clear of debris		
Inflow pipes clear of debris		
Overflow spillway clear of debris		
Inlet area clear of debris		
2. Sediment Traps or Forebays (Annual)		
Obviously trapping sediment		
Greater than 50% of storage volume remaining		
3. Dewatering (~~Semi-annually)~~Annual)		
Trench/chamber or basin dewaters between storms		
4. Sediment Cleanout of Trench/Chamber or Basin (Annual)		

Formatted Table

Formatted: Font: 10 pt

MAINTENANCE ITEM	SATISFACTORY / UNSATISFACTORY	COMMENTS
No evidence of sedimentation in trench/chamber or basin		
Sediment accumulation doesn't yet require cleanout		
5. Inlets (Annual)		
Good condition		
No evidence of erosion		
6. Outlet/Overflow Spillway (Annual)		
Good condition, no need for repair		
No evidence of erosion		
7. Aggregate Repairs (Annual)		
Surface of aggregate clean		
Top layer of stone does not need replacement		
Trench/Chamber or basin does not need rehabilitation		

Comments:

Actions to be Taken:

Formatted Table

Formatted: Font: 10 pt

Permeable Pavement Operation, Maintenance, and Management Inspection Checklist

Project:

Location:

Site Status:

Date:

Time:

Inspector:

MAINTENANCE ITEM	SATISFACTORY / UNSATISFACTORY	COMMENTS
1. Sediment and Debris Cleanout ~~(As Needed)~~(3 Months or Manufacturer's Recommendation)		
Contributing area free of sediment and debris		
Contributing area stabilized and mown, with grass clippings removed		
Surface free of sediment and debris (e.g., mulch, leaves, trash, etc.)		
No signs of clogging (e.g., standing water)		
Surface does not require vacuuming		
2. Dewatering (Monthly)		
Permeable pavement dewaters between storms		
3. Underdrain Outfall, if present (Annual)		

Formatted Table

Formatted: Font: 10 pt

MAINTENANCE ITEM	SATISFACTORY / UNSATISFACTORY	COMMENTS
No evidence of erosion		
4. Surface Repairs (Annual)		
Surface has not been sealed		
No evidence of surface deterioration or spalling		
Surface (top and base course) does not need to be replaced		

Comments:

Actions to be Taken:

Formatted Table

Formatted: Font: 10 pt

Sand/Organic Filter Operation, Maintenance, and Management Inspection Checklist

Project:

Location:

Site Status:

Date:

Time:

Inspector:

MAINTENANCE ITEM	SATISFACTORY / UNSATISFACTORY	COMMENTS
1. Debris Cleanout (~~Semi-annually)~~Annual, After Major Storms)		
Contributing areas clean of debris		
Filtration facility clean of debris		
Inlet and outlets clear of debris		
2. Oil and Grease ~~(Monthly)~~ (Annual, After Major Storms)		
No evidence of filter surface clogging		
Activities in drainage area minimize oil and grease entry		
3. Vegetation (Semi-annually)		
Contributing drainage area stabilized		
No evidence of erosion		
Area mowed and clipping removed		

Formatted Table

Formatted: Font: 10 pt

MAINTENANCE ITEM	SATISFACTORY / UNSATISFACTORY	COMMENTS
4. Water Retention Where Required (~~Semi-annually)~~Annual, After Major Storms)		
Water holding chambers at normal pool		
No evidence of leakage		
5. Sediment Deposition (Annual~~)~~, After Major Storms)		
Filter chamber free of sediments		
Sedimentation chamber not more than half full of sediments		
6. Structural Components (Annual~~)~~, After Major Storms)		
No evidence of structural deterioration		
Any grates are in good condition		
No evidence of spalling or cracking of structural parts		
7. Outlet/Overflow Spillway (Annual~~)~~, After Major Storms)		
Good condition, no need for repairs		
No evidence of erosion (if draining into ~~a~~ natural channel)		
8. Overall Function of Facility (Annual~~)~~, After Major Storms)		
Evidence of flow bypassing facility		
No noticeable odors ~~outside of~~		

Formatted Table

Formatted Table

Formatted: Font: 10 pt

MAINTENANCE ITEM	SATISFACTORY / UNSATISFACTORY	COMMENTS
~~facility~~		

Comments:

Actions to be Taken:

Formatted Table

Formatted: Font: 10 pt

Bioretention Operation, Maintenance, and Management Inspection Checklist

Project:

Location:

Site Status:

Date:

Time:

Inspector:

MAINTENANCE ITEM	SATISFACTORY / UNSATISFACTORY	COMMENTS
1. Debris Cleanout (~~Semi-annually)~~Annual, After Major Storms)		
Bioretention and contributing areas clean of debris		
No dumping of yard wastes into practice		
Litter (branches, etc.) have been removed		
2. Vegetation (~~Semi-annually)~~Annual, After Major Storms)		
Plant height not less than design water depth		
Fertilized per specifications		
Plant composition according to approved plans		
No placement of inappropriate plants		
Grass height not greater than 10 inches		

Formatted Table

Formatted Table

Formatted Table

Formatted Table

Formatted: Font: 10 pt

MAINTENANCE ITEM	SATISFACTORY / UNSATISFACTORY	COMMENTS
No evidence of erosion		
3. Check Dams/Energy Dissipaters/Sumps (Annual, After Major Storms)		
No evidence of sediment buildup		
Sumps should not be more than 50% full of sediment		
No evidence of erosion at downstream toe of drop structure		
4. Dewatering (Semi-annually)		
Dewaters between storms		
No evidence of standing water		
5. Sediment Deposition (Annual~~)~~, after Major Storms)		
Swale clean of sediments		
Sediments should not be > 20% of swale design depth		
6. Outlet/Overflow Spillway (Annual, After Major Storms)		
Good condition, no need for repair		
No evidence of erosion		
No evidence of any blockages		
7. Integrity of Filter Bed (Annual~~)~~, After Major Storms)		
Filter bed has not been blocked or filled inappropriately		

Formatted Table

Formatted Table

Formatted Table

Formatted Table

Formatted Table

Formatted Table

Formatted: Font: 10 pt

Comments:

Actions to be Taken:

Formatted Table

Formatted: Font: 10 pt

Open Channel Operation, Maintenance, and Management Inspection Checklist

Project:

Location:

Site Status:

Date:

Time:

Inspector:

MAINTENANCE ITEM	SATISFACTORY/ UNSATISFACTORY	COMMENTS
1. Debris Cleanout (~~Semi-annually)~~Annual, After Major Storms)		
Contributing areas clean of debris		
2. Check Dams or Energy Dissipators (Annual, After Major Storms)		
No evidence of flow going around structures		
No evidence of erosion at downstream toe		
Soil permeability		
Groundwater / bedrock		
3. Vegetation (~~Semi-annually)~~Annual, After Major Storms)		
Mowing done when needed		
Minimum mowing depth not exceeded		
No evidence of erosion		
Fertilized per specification		

Formatted Table

Formatted: Font: 10 pt

MAINTENANCE ITEM	SATISFACTORY/ UNSATISFACTORY	COMMENTS
4. Dewatering (~~Semi-annually)~~Annual, After Major Storms)		
Dewaters between storms		
5. Sediment deposition (Annual~~)~~, After Major Storms)		
Clean of sediment		
6. Outlet/Overflow Spillway (Annual~~)~~, After Major Storms)		
Good condition, no need for repairs		
No evidence of erosion		

Comments:

Actions to be Taken:

Formatted Table

Formatted: Font: 10 pt

E.2 MAINTENANCE AGREEMENTS

A major contributor to unmaintained stormwater facilities is a lack of clear ownership and responsibility definition. In order for an inspection and maintenance program to be effective, the roles for each responsibility must be clearly defined prior to construction of a system. This can be accomplished with a maintenance agreement between the site owners and the responsible authority.

Some key aspects of these maintenance agreements are the clear delineation of responsibilities, such as:

- Identification of who will perform inspection duties and how often.
- Listed duties that are to be performed by the owner, such as mowing, debris removal, and replanting of vegetation.
- Defined roles for the responsible authority, ~~possibly~~such as inspection, and/or modifications to the system such as resizing an orifice.
- Determination of a course of action to be taken if the owner does not fulfill their obligations (i.e. repayment to the responsible authority for activities that the owner did not perform).
- Development of a pollution prevention plan by the owner.
- Requirement of a report, possibly annually, that would serve to keep the owner involved and aware of their responsibilities.

A sample maintenance agreement is included below.

Formatted Table

Formatted: Font: 10 pt

Sample Stormwater Facility Maintenance Agreement

THIS AGREEMENT, made and entered into this ___ day of _____, 20___, by and between (Insert Full Name of Owner) _____ hereinafter called the "Landowner", and the [Local Jurisdiction], hereinafter called the "[Town/City]". WITNESSETH, that WHEREAS, the Landowner is the owner of certain real property described as (Tax Map/Parcel Identification Number) _____ as recorded by deed in the land records of [Local Jurisdiction] Deed Book _____ Page _____, hereinafter called the "Property".

WHEREAS, the Landowner is proceeding to build on and develop the property; and WHEREAS, the Site Plan/Subdivision Plan known as _____, (Name of Plan/Development) hereinafter called the "Plan", which is expressly made a part hereof, as approved or to be approved by the [Town/City], provides for detention of stormwater within the confines of the property; and

WHEREAS, the [Town/City] and the Landowner, its successors and assigns, including any homeowners association, agree that the health, safety, and welfare of the residents of [Local Jurisdiction] require that on-site stormwater management facilities be constructed and maintained on the Property; and

WHEREAS, the [Town/City] requires that on-site stormwater management facilities as shown on the Plan be constructed and adequately maintained by the Landowner, its successors and assigns, including any homeowners association.

NOW, THEREFORE, in consideration of the foregoing premises, the mutual covenants contained herein, and the following terms and conditions, the parties hereto agree as follows:

1. The on-site stormwater management facilities shall be constructed by the Landowner, its successors and assigns, in accordance with the plans and specifications identified in the Plan.
2. The Landowner, its successors and assigns, including any homeowners association, shall adequately maintain the stormwater management facilities~~.~~ in accordance with the required Operation and Maintenance Plan. This includes all pipes, channels or other conveyances built to convey stormwater to the facility, as well as all structures, improvements, and vegetation provided to control the quantity and quality of the stormwater. Adequate maintenance is herein defined as good working condition so that these facilities are performing their design functions. The Stormwater Best Management Practices Operation, Maintenance and Management Checklists are to be used to establish what good working condition is acceptable to the [Town/City].

Formatted Table

Formatted: Font: 10 pt

3. The Landowner, its successors and assigns, shall inspect the stormwater management facility and submit an inspection report annually. The purpose of the inspection is to assure safe and proper functioning of the facilities. The inspection shall cover the entire facilities, berms, outlet structure, basin areas, access roads, etc. Deficiencies shall be noted in the inspection report.
4. The Landowner, its successors and assigns, hereby grant permission to the [Town/City], its authorized agents and employees, to enter upon the Property and to inspect the stormwater management facilities whenever the [Town/City] deems necessary. The purpose of inspection is to follow-up on reported deficiencies and/or to respond to citizen complaints. The [Town/City] shall provide the Landowner, its successors and assigns, copies of the inspection findings and a directive to commence with the repairs if necessary.
5. In the event the Landowner, its successors and assigns, fails to maintain the stormwater management facilities in good working condition acceptable to the [Town/City], the [Town/City] may enter upon the Property and take whatever steps necessary to correct deficiencies identified in the inspection report and to charge the costs of such repairs to the Landowner, its successors and assigns. This provision shall not be construed to allow the [Town/City] to erect any structure of permanent nature on the land of the Landowner outside of the easement for the stormwater management facilities. It is expressly understood and agreed that the [Town/City] is under no obligation to routinely maintain or repair said facilities, and in no event shall this Agreement be construed to impose any such obligation on the [Town/City].
6. The Landowner, its successors and assigns, will perform the work necessary to keep these facilities in good working order as appropriate. In the event a maintenance schedule for the stormwater management facilities (including sediment removal) is outlined on the approved plans, the schedule will be followed.
7. In the event the [Town/City] pursuant to this Agreement, performs work of any nature, or expends any funds in performance of said work for labor, use of equipment, supplies, materials, and the like, the Landowner, its successors and assigns, shall reimburse the [Town/City] upon demand, within thirty (30) days of receipt thereof for all actual costs incurred by the [Town/City] hereunder.
8. This Agreement imposes no liability of any kind whatsoever on the [Town/City] and the Landowner agrees to hold the [Town/City] harmless from any liability in the event the stormwater management facilities fail to operate properly.
9. This Agreement shall be recorded among the land records of [Local Jurisdiction] and shall constitute a covenant running with the land, and shall be binding on the Landowner, its administrators, executors, assigns, heirs and any other successors in interests, including any homeowners association.

WITNESS the following signatures and seals:

_____
Company/Corporation/Partnership Name (Seal)

By: _____

Formatted Table

Formatted: Font: 10 pt

_____
(Type Name and Title)

The foregoing Agreement was acknowledged before me this ____ day of _____, 20___, by _____.

_____
NOTARY PUBLIC
My Commission Expires: _____

By: _____
_____
(Type Name and Title)

The foregoing Agreement was acknowledged before me this ____ day of _____, 20___, by _____.

_____
NOTARY PUBLIC
My Commission Expires: _____

Approved as to Form:
_____ _____
[Town/City] Attorney Date

Formatted Table

Formatted: Font: 10 pt

APPENDIX F: GUIDANCE ON BMP CONSTRUCTION SPECIFICATIONS

The following sections provide guidance on the standards and specifications for the design and construction of the stormwater treatment practices described in Chapters Five and Seven. ~~In addition, a construction checklist is provided with each construction specification.~~ In addition, a sample construction checklist is provided with each specification. These checklists should be modified for a specific BMP that may or may not need all of the items listed. The information provided in this appendix does not relieve an engineer's responsibility for the safety and function of the BMPs constructed at a site. This specification is intended solely for use by professional personnel who are competent to evaluate the significance and limitations of the information provided and who will accept responsibility for the application of this information. The authors, DEM, and CRMC disclaim any and all responsibility and liability for the accuracy and the application of the information contained in this appendix. While this appendix serves as guidance, it is expected that these specifications will be used when reference is made to the technical specifications related to BMP performance, or if no other specifications are provided by an applicant. If an applicant does not use the specifications herein, an explanation must be provided.

F.1 Construction Standards/Specifications for Shallow WVTSs and Stormwater Basins

These specifications are generally appropriate to earthen basins. Practitioners proposing to construct an impoundment having a dam 6 feet in height or more, or a capacity of 15 ac-ft or more, should consult the State of Rhode Island DEM Office of Compliance and Inspection Dam Safety regulations for the latest version of dam construction specifications.

All references to ASTM and AASHTO specifications apply to the most recent version.

F.1.1 Site Preparation

Site preparation should be in accordance with RIDOT specification section 201 - Site Preparation and the following provisions, as applicable.

Areas designated for borrow areas, embankment, and structural works shall be cleared, grubbed and stripped of topsoil. All trees, vegetation, roots and other objectionable material shall be removed. Channel banks and sharp breaks shall be sloped to no steeper than 1:1. All trees shall be cleared and grubbed within 15 feet of the toe of the embankment, and within 25 feet of the principal spillway outlet.

Areas to be covered by the impoundment will be cleared of all trees, brush, logs, fences, rubbish and other objectionable material unless otherwise designated on the

Formatted Table

Formatted: Font: 10 pt

plans. Trees, brush, and stumps shall be cut approximately level with the ground surface.

All cleared and grubbed material shall be disposed of outside and below the limits of the dam and reservoir as directed by the owner or his representative. When specified, a sufficient quantity of topsoil will be stockpiled in a suitable location for use on the embankment and other designated areas.

F.1.2 Earth Fill

Earth fill should be in accordance with RIDOT specification no. 202 – Earthwork and Erosion Control and the following provisions, as applicable.

Material - The fill material shall be taken from approved designated borrow areas. It shall be free of roots, stumps, wood, rubbish, stones greater than 6 inches, frozen or other objectionable materials. Fill material for the center of the embankment, and cut off trench shall conform to Unified Soil Classification GC, SC, CH, or CL and must have at least 30% passing the #200 sieve. Consideration may be given to the use of other materials in the embankment if designed by a geotechnical engineer. Such special designs must have construction supervised by a geotechnical engineer. Materials used in the outer shell of the embankment must have the capability to support vegetation of the quality required to prevent erosion of the embankment.

Placement - Areas on which fill is to be placed shall be scarified prior to placement of fill. Fill materials shall be placed in maximum 8-inch thick (before compaction) layers which are to be continuous over the entire length of the fill. The most permeable borrow material shall be placed in the downstream portions of the embankment. The principal spillway must be installed concurrently with fill placement and not excavated into the embankment.

Compaction - The movement of the hauling and spreading equipment over the fill shall be controlled so that the entire surface of each lift shall be traversed by not less than one tread track of heavy equipment or compaction shall be achieved by a minimum of four complete passes of a sheepsfoot, rubber tired or vibratory roller. Fill material shall contain sufficient moisture such that the required degree of compaction will be obtained with the equipment used. The fill material shall contain sufficient moisture so that if formed into a ball it will not crumble, yet not be so wet that water can be squeezed out.

When required by the approving agency the minimum required density shall not be less than 95% of maximum dry density with a moisture content within 2% of the optimum. Each layer of fill shall be compacted as necessary to obtain that density, and is to be certified by the Engineer at the time of construction. All compaction is to be determined by AASHTO Method T-99 (Standard Proctor).

Cut-off Trench - The cut-off trench shall be excavated into ~~impervious~~low hydraulic conductivity material to the depth specified along or parallel to the centerline of the embankment as shown on the plans. The bottom width of the trench shall be governed

Formatted Table

Formatted: Font: 10 pt

by the equipment used for excavation, with the minimum width being four feet. The depth shall be at least four feet below existing grade or as shown on the plans. The side slopes of the trench shall be 1:1 or flatter. The backfill shall be compacted with construction equipment, rollers, or hand tampers to assure maximum density and minimum permeability.

Embankment Core - The core shall be parallel to the centerline of the embankment as shown on the plans. The top width of the core shall be a minimum of four feet. The height shall extend up to at least the 100-year water elevation or as shown on the plans. The side slopes shall be 1:1 or flatter. The core shall be compacted with construction equipment, rollers, or hand tampers to assure maximum density and minimum permeability. In addition, the core shall be placed concurrently with the outer shell of the embankment.

F.1.3 Structure Backfill

Backfilling should be performed in accordance with RIDOT specification No. 203.03.5 - Backfilling and the following provisions, as applicable.

Backfill adjacent to pipes or structures shall be of the type and quality conforming to that specified for the adjoining fill material. The fill shall be placed in horizontal layers not to exceed four inches in thickness and compacted by hand tampers or other manually directed compaction equipment. The material needs to fill completely all spaces under and adjacent to the pipe. At no time during the backfilling operation shall driven equipment be allowed to operate closer than four feet, measured horizontally, to any part of a structure. Under no circumstances shall equipment be driven over any part of a concrete structure or pipe, unless there is a compacted fill of 24 inches or greater over the structure or pipe.

Structure backfill may be flowable fill meeting the requirements of the Federal Highway Administration standards. The mixture shall have a 100-200 psi; 28-day unconfined compressive strength. The flowable fill shall have a minimum pH of 4.0 and a minimum resistivity of 2,000 ohm-cm. Material shall be placed such that a minimum of 6 inches (measured perpendicular to the outside of the pipe) of flowable fill shall be under (bedding), over and, on the sides of the pipe. It only needs to extend up to the spring line for rigid conduits. Average slump of the fill shall be 7 inches to assure flowability of the material. Adequate measures shall be taken (sand bags, etc.) to prevent floating the pipe. When using flowable fill, all metal pipe shall be bituminous coated. Any adjoining soil fill shall be placed in horizontal layers not to exceed 4 inches in thickness and compacted by hand tampers or other manually directed compaction equipment. The material shall completely fill all voids adjacent to the flowable fill zone. At no time during the backfilling operation shall driven equipment be allowed to operate closer than four feet, measured horizontally, to any part of a structure. Under no circumstances shall equipment be driven over any part of a structure or pipe unless there is a compacted fill of 24 inches or greater over the structure or pipe. Backfill material outside the structural backfill (flowable fill) zone shall be of the type and quality

Formatted Table

Formatted: Font: 10 pt

conforming to that specified for the core of the embankment or other embankment materials.

F.1.4 Pipe Conduits

All pipes shall be circular in cross section.

F.1.4.1 Corrugated Metal Pipe

Corrugated metal pipe should be in accordance with RIDOT specification section M.04.02 - Drainage and the following provisions, as applicable.

All of the following criteria shall apply for corrugated metal pipe:

- Materials - (Polymer-coated steel pipe) - Steel pipes with polymeric coatings shall have a minimum coating thickness of 0.01 inch (10 mil) on both sides of the pipe. This pipe and its appurtenances shall conform to the requirements of AASHTO Specifications M-245 & M-246 with watertight coupling bands or flanges.
- Materials - (Aluminum-coated Steel Pipe) - This pipe and its appurtenances shall conform to the requirements of AASHTO Specification M-274 with watertight coupling bands or flanges. Aluminum Coated Steel Pipe, when used with flowable fill or when soil and/or water conditions warrant the need for increased durability, shall be fully bituminous coated per requirements of AASHTO Specification M-190 Type A. Any aluminum coating damaged or otherwise removed shall be replaced with cold applied bituminous coating compound. Aluminum surfaces that are to be in contact with concrete shall be painted with one coat of zinc chromate primer or two coats of asphalt.
- Materials - (Aluminum Pipe) - This pipe and its appurtenances shall conform to the requirements of AASHTO Specification M-196 or M-211 with watertight coupling bands or flanges. Aluminum Pipe, when used with flowable fill or when soil and/or water conditions warrant for increased durability, shall be fully bituminous coated per requirements of AASHTO Specification M-190 Type A. Aluminum surfaces that are to be in contact with concrete shall be painted with one coat of zinc chromate primer or two coats of asphalt. Hot dip galvanized bolts may be used for connections. The pH of the surrounding soils shall be between 4 and 9.
- Coupling bands, anti-seep collars, end sections, etc., must be composed of the same material and coatings as the pipe. Metals must be insulated from dissimilar materials with use of rubber or plastic insulating materials at least 24 mils in thickness.
- Connections - All connections with pipes must be completely watertight. The drain pipe or barrel connection to the riser shall be welded all around when the pipe and riser are metal. Anti-seep collars shall be connected to the pipe in such a manner as to be completely watertight. Dimple bands are not considered to be watertight.

  All connections shall use a rubber or neoprene gasket when joining pipe sections. The end of each pipe shall be re-rolled an adequate number of

Formatted Table

Formatted: Font: 10 pt

corrugations to accommodate the bandwidth. The following type connections are acceptable for pipes less than 24 inches in diameter: flanges on both ends of the pipe with a circular 3/8 inch closed cell neoprene gasket, pre-punched to the flange bolt circle, sandwiched between adjacent flanges; a 12-inch wide standard lap type band with 12-inch wide by 3/8-inch thick closed cell circular neoprene gasket; and a 12-inch wide hugger type band with o-ring gaskets having a minimum diameter of 1/2 inch greater than the corrugation depth. Pipes 24 inches in diameter and larger shall be connected by a 24-inch long annular corrugated band using a minimum of 4 (four) rods and lugs, 2 on each connecting pipe end. A 24-inch wide by 3/8-inch thick closed cell circular neoprene gasket will be installed with 12 inches on the end of each pipe. Flanged joints with 3/8-inch closed cell gaskets the full width of the flange is also acceptable.

Helically corrugated pipe shall have either continuously welded seams or have lock seams with internal caulking or a neoprene bead.

- Bedding - The pipe shall be firmly and uniformly bedded throughout its entire length. Where rock or soft, spongy or other unstable soil is encountered, all such material shall be removed and replaced with suitable earth compacted to provide adequate support.
- Backfilling shall conform to "Structure Backfill."
- Other details (anti-seep collars, valves, etc.) shall be as shown on the drawings.

F.1.4.2 Reinforced Concrete Pipe

Reinforced concrete pipe should be in accordance with RIDOT specification section M.04.01 - Drainage and the following provisions, as applicable.

All of the following criteria shall apply for reinforced concrete pipe:

- Materials - Reinforced concrete pipe shall have bell and spigot joints with rubber gaskets and shall equal or exceed ASTM C-361.
- Bedding - Reinforced concrete pipe conduits shall be laid in a concrete bedding / cradle for their entire length. This bedding / cradle shall consist of high slump concrete placed under the pipe and up the sides of the pipe at least 50% of its outside diameter with a minimum thickness of 6 inches. Where a concrete cradle is not needed for structural reasons, flowable fill may be used as described in the "Structure Backfill" section of this standard. Gravel bedding is not permitted.
- Laying pipe - Bell and spigot pipe shall be placed with the bell end upstream. Joints shall be made in accordance with recommendations of the manufacturer of the material. After the joints are sealed for the entire line, the bedding shall be placed so that all spaces under the pipe are filled. Care shall be exercised to prevent any deviation from the original line and grade of the pipe. The first joint must be located within 4 feet from the riser.
- Backfilling shall conform to "Structure Backfill".
- Other details (anti-seep collars, valves, etc.) shall be as shown on the drawings.

Formatted Table

Formatted: Font: 10 pt

F.1.4.3 Plastic Pipe

Plastic pipe should be in accordance with RIDOT specification No. 701.02.1 - Non-Metallic Pipe and the following provisions, as applicable.

The following criteria shall apply for plastic pipe:

- Materials - PVC pipe shall be PVC-1120 or PVC-1220 conforming to ASTM D-1785 or ASTM D-2241. Corrugated High Density Polyethylene (HDPE) pipe, couplings and fittings shall conform to the following: 4 – 10 inch pipe shall meet the requirements of AASHTO M252 Type S, and 12 inch through 24 inch shall meet the requirements of AASHTO M294 Type S.
- Joints and connections to anti-seep collars shall be completely watertight.
- Bedding -The pipe shall be firmly and uniformly bedded throughout its entire length. Where rock or soft, spongy or other unstable soil is encountered, all such material shall be removed and replaced with suitable earth compacted to provide adequate support.
- Backfilling shall conform to "Structure Backfill."
- Other details (anti-seep collars, valves, etc.) shall be as shown on the drawings.

Drainage Diaphragms

When a drainage diaphragm is used, a ~~registered professional engineer~~RI-licensed PE or qualified designee will supervise the design and construction inspection.

Concrete

Concrete sh~~a~~oul~~l~~d meet the requirements of the ~~Federal Highway Administration Standard Specifications for Construction and Materials.~~RIDOT specification section 600 - Concrete.

Rock Riprap

~~Rock riprap shall meet the requirements of the Federal Highway Administration.~~ *Rock riprap should be in accordance with RIDOT specification section 920 - Riprap and the following provisions, as applicable.*

Filter fabric placed beneath the riprap shall meet federal department of transportation requirements for a Class "C" filter fabric. Some acceptable filter fabrics that meet the Class "C" criteria include:

- Mirafi 180-N
- Amoco 4552
- Webtec N07
- Geolon N70
- Carthage FX-70S

This is only a partial listing of available filter fabrics ~~based on information provided by the manufacturers to the 1997 Specifier's Guide dated December 1996.~~. It is the responsibility of the engineer to verify the adequacy of the material, as there are changes in the manufacturing process and the type of fabric used, which may affect the continued acceptance.

Formatted: Font color: Auto

Formatted Table

Formatted: Font: 10 pt

Care of Water during Construction

All work on permanent structures shall be carried out in areas free from water. The Contractor shall construct and maintain all temporary dikes, levees, cofferdams, drainage channels, and stream diversions necessary to protect the areas to be occupied by the permanent works. The contractor shall also furnish, install, operate, and maintain all necessary pumping and other equipment required for removal of water from various parts of the work and for maintaining the excavations, foundation, and other parts of the work free from water as required or directed by the engineer for constructing each part of the work. After having served their purpose, all temporary protective works shall be removed or leveled and graded to the extent required to prevent obstruction in any degree whatsoever of the flow of water to the spillway or outlet works and so as not to interfere in any way with the operation or maintenance of the structure. Stream diversions shall be maintained until the full flow can be passed through the permanent works. The removal of water from the required excavation and the foundation shall be accomplished in a manner and to the extent that will maintain stability of the excavated slopes and bottom required excavations and will allow satisfactory performance of all construction operations. During the placing and compacting of material in required excavations, the water level at the locations being refilled shall be maintained below the bottom of the excavation at such locations which may require draining the water sumps from which the water shall be pumped.

F.1.5 Stabilization

All borrow areas shall be graded to provide proper drainage and left in a sightly condition. All exposed surfaces of the embankment, spillway, spoil and borrow areas, and berms shall be stabilized by seeding, liming, fertilizing and mulching in accordance with local Natural Resources Conservation Service Standards and Specifications.

F.1.6 Erosion and Sediment Control

Erosion and sediment control should be in accordance with RIDOT specification section 200 - Earthwork and Erosion Control and the following provisions, as applicable.

Construction operations will be carried out in such a manner that erosion will be controlled, and water and air pollution minimized. State laws concerning pollution abatement will be followed. Construction plans shall detail erosion and sediment control measures.

F.1.7 Operation and Maintenance

An operation and maintenance plan in accordance with the State of Rhode Island Dam Safety Rules and Regulations will be prepared for all ~~basins.~~WVTS facilities and basins with embankments that meet the dam criteria. As a minimum, a dam inspection checklist shall be included as part of the operation and maintenance plan and performed at least annually. ~~Written records of maintenance and major repairs need to be retained in a file.~~

Formatted: Keep with next, Keep lines together

Formatted Table

Formatted: Font: 10 pt

Supplemental Stormwater Basin and Shallow WVTS Specifications

1. It is preferred to use the same material in the embankment as is being installed for the core trench. If this is not possible because the appropriate material is not available, a dam core with a shell may be used. The cross-section of the stormwater facility should show the limits of the dam core (up to the 100-year water surface elevation) as well as the acceptable materials for the shell. The shape of the dam core and the material to be used in the shell should be provided by the design engineer.

2. If the compaction tests for the remainder of the site improvements are using Modified Proctor (AASHTO T-180), then to maintain consistency on-site, modified proctor may be used in lieu of standard proctor (AASHTO T-99). The minimum required density using the modified proctor test method shall be at least 92% of maximum dry density with a moisture content of ±2% of the optimum.

3. For all ~~stormwater management~~WVTS facilities and basins with dam embankments, a RI-licensed ~~professional engineer~~PE (civil) or qualified designee must be present to verify compaction in accordance with the selected test method. This information needs to be provided in a report to the design engineer, so that certification of the construction of the facility can be made.

4. A 4-inch layer of topsoil shall be placed on all disturbed areas of the dam embankment. Seeding, liming, fertilizing, mulching, etc. shall be in accordance with NRCS Soil Standards and Specifications~~.~~ and with RIDOT specification section L.01 - Topsoiling and Seeding. The purpose of the topsoil is to establish a good growth of grass which is not always possible with some of the materials that may be placed for the embankment fill.

5. Fill placement shall not exceed a maximum of 8 inches. Each lift shall be continuous for the entire length of the embankment.

Formatted Table

Formatted: Font: 10 pt

Table F-1 Stormwater Basin/Shallow WVTS Construction Inspection Checklist

Project:

Location:

Site Status:

Date:

Time:

Inspector:

CONSTRUCTION SEQUENCE	SATISFACTORY/ UNSATISFACTORY	COMMENTS
1. Pre-Construction/Materials and Equipment		
Pre-construction meeting		
Pipe and appurtenances on-site prior to construction and dimensions checked		
1. Material (including protective coating, if specified)		
2. Diameter		
3. Dimensions of metal riser or pre-cast concrete outlet structure		
4. Required dimensions between water control structures (orifices, weirs, etc.) are in accordance with approved plans		
5. Barrel stub for prefabricated pipe structures at proper angle for design barrel slope		
6. Number and dimensions of prefabricated anti-seep collars		

Formatted Table

Formatted: Font: 10 pt

CONSTRUCTION SEQUENCE	SATISFACTORY/ UNSATISFACTORY	COMMENTS
7. Watertight connectors and gaskets		
8. Outlet drain valve		
Project benchmark near basin site		
Equipment for temporary de-watering		
2. Subgrade Preparation		
Area beneath embankment stripped of all vegetation, topsoil, and organic matter		
3. Pipe Installation		
Method of installation detailed on plans		
A. Bed preparation		
Basin/WVTS excavated with specified side slopes		
Stable, uniform, dry subgrade of relatively impervious material (If subgrade is wet, contractor shall have defined steps before proceeding with installation)		
Invert at proper elevation and grade		
B. Pipe placement		
Metal/plastic pipe		
1. Watertight connectors and gaskets properly installed		
2. Anti-seep collars properly spaced and having watertight connections to pipe		

Formatted Table

Formatted: Font: 10 pt

CONSTRUCTION SEQUENCE	SATISFACTORY/ UNSATISFACTORY	COMMENTS
3. Backfill placed and tamped by hand under "haunches" of pipe		
4. Remaining backfill placed in max. 8 inch lifts using small power tamping equipment until 2 ft cover over pipe is reached		
Concrete pipe		
1. Pipe set on blocks or concrete slab for pouring of low cradle		
2. Pipe installed with rubber gasket joints with no spalling in gasket interface area		
3. Excavation for lower half of anti-seep collar(s) with reinforcing steel set		
4. Entire area where anti-seep collar(s) will come in contact with pipe coated with mastic or other approved waterproof sealant		
5. Low cradle and bottom half of anti-seep collar installed as monolithic pour and of an approved mix		
6. Upper half of anti-seep collar(s) formed with reinforcing steel set		
7. Concrete for collar of an approved mix and vibrated into place		
8. Forms stripped and collar inspected for honeycomb prior to backfilling. Parge if necessary.		
C. Backfilling		

Formatted Table

Formatted: Font: 10 pt

CONSTRUCTION SEQUENCE	SATISFACTORY/ UNSATISFACTORY	COMMENTS
Fill placed in maximum 8-in lifts		
Backfill taken minimum 2 ft above top of anti-seep collar elevation before traversing with heavy equipment		
4. Riser / Outlet Structure Installation		
Riser located within embankment		
A. Metal riser		
Riser base excavated or formed on stable subgrade to design dimensions		
Set on blocks to design elevations and plumbed		
Reinforcing bars placed at right angles and projecting into sides of riser		
Concrete poured so as to fill inside of riser to invert of barrel		
B. Pre-cast concrete structure		
Dry and stable subgrade		
Riser base set to design elevation		
If more than one section, no spalling in gasket interface area; gasket or approved caulking material placed securely		
Watertight and structurally sound collar or gasket joint where structure connects to pipe spillway		
C. Poured concrete structure		

Formatted Table

Formatted: Font: 10 pt

CONSTRUCTION SEQUENCE	SATISFACTORY/ UNSATISFACTORY	COMMENTS
Footing excavated or formed on stable subgrade, to design dimensions with reinforcing steel set		
Structure formed to design dimensions, with reinforcing steel set as per plan		
Concrete of an approved mix and vibrated into place		
Forms stripped & inspected for "honeycomb" prior to backfilling; parge if necessary		
5. Embankment Construction		
Fill material		
Compaction		
Embankment		
1. Fill placed in specified lifts and compacted with appropriate equipment		
2. Constructed to design cross-section, side slopes and top width		
3. Constructed to design elevation plus allowance for settlement		
6. Impounded Area Construction		
Excavated / graded to design contours and side slopes		
Inlet pipes have adequate outfall protection		
Forebay(s)		
Basin benches		

Formatted Table

Formatted: Font: 10 pt

CONSTRUCTION SEQUENCE	SATISFACTORY/ UNSATISFACTORY	COMMENTS
7. Earth Emergency Spillway Construction		
Spillway located in cut or structurally stabilized with riprap, gabions, concrete, etc.		
Excavated to proper cross-section, side slopes and bottom width		
Entrance channel, crest, and exit channel constructed to design grades and elevations		
8. Outlet Protection		
A. End section		
Securely in place and properly backfilled		
B. Endwall		
Footing excavated or formed on stable subgrade, to design dimensions and reinforcing steel set, if specified		
Endwall formed to design dimensions with reinforcing steel set as per plan		
Concrete of an approved mix and vibrated into place		
Forms stripped and structure inspected for "honeycomb" prior to backfilling; parge if necessary		
C. Riprap apron / channel		
Apron / channel excavated to design cross-section with proper transition to existing ground		

Formatted Table

Formatted: Font: 10 pt

CONSTRUCTION SEQUENCE	SATISFACTORY/ UNSATISFACTORY	COMMENTS
Filter fabric in place		
Stone sized as per plan and uniformly place at the thickness specified		
9. Vegetative Stabilization		
Approved seed mixture		
Proper surface preparation and required soil amendments		
Excelsior mat or other stabilization, as per plan		
10. Miscellaneous		
Drain for basins having a permanent pool		
Trash rack / anti-vortex device secured to outlet structure		
Trash protection for low flow pipes, orifices, etc.		
Fencing (when required)		
Access road		
Set aside for clean-out maintenance		
11. Shallow WVTSs		
Adequate water balance		
Variety of depth zones present		
Approved pondscaping plan in place and budget for additional plantings		

Formatted Table

Formatted: Font: 10 pt

CONSTRUCTION SEQUENCE	SATISFACTORY/ UNSATISFACTORY	COMMENTS
Plants and materials ordered 6 months prior to construction		
Construction planned to allow for adequate planting and establishment of plant community		
Shallow WVTS setback area preserved to maximum extent possible		

Comments:

Actions to be Taken:

Formatted Table

Formatted: Font: 10 pt

F.2 CONSTRUCTION STANDARDS/SPECIFICATIONS FOR GRAVEL WVTS

The specifications listed here were adapted ~~by~~from UNHSC (200~~8~~9).

F.2.1 SPECIFICATIONS SUMMARY

- No-geotextile or geofabric layers are used within this system, but may be used to line walls~~,~~;
- If a native low hydraulic conductivity soil is not present below the desired location of the gravel WVTS, a low permeability liner or soil (hydraulic conductivity less than 10^{-5} cm/s = 0.03 ft/day) below the gravel layer should be used to minimize infiltration, preserve horizontal flow in the gravel, and maintain the emergent plants~~.~~;
- 8 in. thickness of an organic soil as optional top layer. This layer is leveled (constructed with a surface slope of zero~~),~~);
- 3 in. minimum thickness of an intermediate layer of a graded aggregate filter is needed to prevent the organic soil from moving down into the gravel sublayer~~.~~;
- 24 in. minimum thickness of ¾-inch ~~crushed-stone (~~gravel~~)~~ sublayer.
- ~~The~~Where applicable, the primary outlet invert shall be located 4 inches below the elevation of the organic soil surface to control ~~ground~~water elevation. Care should be taken to not design a siphon that would drain the WVTS: the primary outlet invert location must be open or vented~~,~~;
- ~~An optional high flow outlet at equal elevation or lower to the primary outlet may be installed for maintenance. This outlet would need to be plugged during regular operation. The optional outlet allows for flushing of the treatment cells at higher flow rates. If it is located lower, it can be used to drain the system for maintenance.~~
- The minimum spacing between the subsurface perforated distribution line and the subsurface perforated collection drain (see Figure 5-3) at either end of the gravel in each treatment cell ~~Is~~ should be 15 ft ~~(4.6 m):~~; there should be a minimum horizontal travel distance of 15 ft ~~(4.6 m)~~ within the gravel layer in each cell~~,~~;
- Vertical perforated or slotted riser pipes deliver water from the surface down to the subsurface, perforated or slotted distribution lines. These risers sh~~a~~oul~~l~~d have a maximum spacing of 15 feet (~~4.6 m) (~~Figure 5-3) (between each other). Oversizing of the perforated vertical risers is useful to allow a margin of safety against clogging with a minimum recommended diameter of 12 ~~inches~~in. for the central riser and 6 ~~inches~~in. for end risers. The vertical risers shall not be capped, but rather covered with an inlet grate to allow for an overflow when the water level exceeds the WQ_v~~.~~;
- Vertical cleanouts connected to the distribution and collection subdrains, at each end, shall be perforated or slotted only within the ~~crushed stone~~gravel layer, and solid within the organic soil and storage area above. This is important to prevent short-circuiting~~,~~ and soil piping; and
- Berms and weirs separating the forebay and treatment cells should be constructed with clay, or non-conductive soils, and/or a fine geotextile, or some combination thereof to avoid water seepage and soil piping through these earthen dividers~~.~~.

Formatted: Underline

Formatted: Underline

Formatted Table

Formatted: Font: 10 pt

F.2.2 SURFACE INFILTRATION RATES AND HYDROGEOLOGIC MATERIALS

F.2.2.1 Organic Soil (Optional)

The surface infiltration rates of the gravel WVTS soil should be similar to a low hydraulic conductivity organic soil (0.1-0.01 ft/day). This soil can be manufactured using compost, sand, and some fine soils to blend to a high % organic matter content soil (>15% organic matter). Avoid using clay contents in excess of 15% because of potential migration of fines into subsurface gravel layer. Do not use geotextiles ~~within~~between the horizontal layers of this system as they will clog due to fines and may restrict root growth.

An intermediate layer of a graded aggregate filter (i.e., pea gravel) is needed to prevent the organic soil from migrating down into the ~~crushed stone (~~gravel~~)~~ sublayer. This is to prevent migration of the finer setting bed (organic soil) into the coarse sublayer. Material compatibility should be evaluated using FHWA criteria (see Ferguson, 2005):

Criteria 1: $D_{15,\,COARSE\ \ SUBLAYER} \leq 5\ D_{85,SETTING\ \ BED}$

Criteria 2: $D_{50,\,COARSE\ \ SUBLAYER} \leq 25\ D_{50,\ \ SETTING\ \ BED}$

F.2.2.2 Gravel Layer

Below the organic soil and pea gravel is a ~~crushed stone (~~gravel~~)~~ sublayer with a 24 in. ~~(0.6 m)~~ minimum thickness. Angular ~~crushed stone~~gravel is needed with a minimum size ~3/4–in (2-cm). Large particle, angular ~~stone~~coarse to very coarse gravel is needed to maintain system longevity.

~~F.2.2.2~~F.2.2.3 Native Materials and Liner

If native a low hydraulic conductivity native soil is not present below the gravel layer, a low permeability liner or soil should be used to: minimize infiltration, preserve horizontal flow in the gravel, and maintain the emergent plants. If geotechnical tests confirm the need for a liner, acceptable options include: (a) 6 to 12 inches ~~(15 – 30 cm)~~ of clay soil (minimum 15% passing the #200 sieve and a minimum permeability of 1 x 10^{-5} cm/sec), (b) a 30 ml HDPE liner, (c) bentonite, (d) use of chemical additives (see NRCS Agricultural Handbook No. 386, dated 1961, or Engineering Field Manual), or (e) a design prepared by a ~~Professional Engineer~~RI-licensed PE.

Formatted: Indent: Left: 0.5", Hanging: 0.69"

Formatted: Heading 4,4-SWManual

Formatted Table

Formatted: Font: 10 pt

Figure F-1 Gravel WVTS Materials Cross-Section

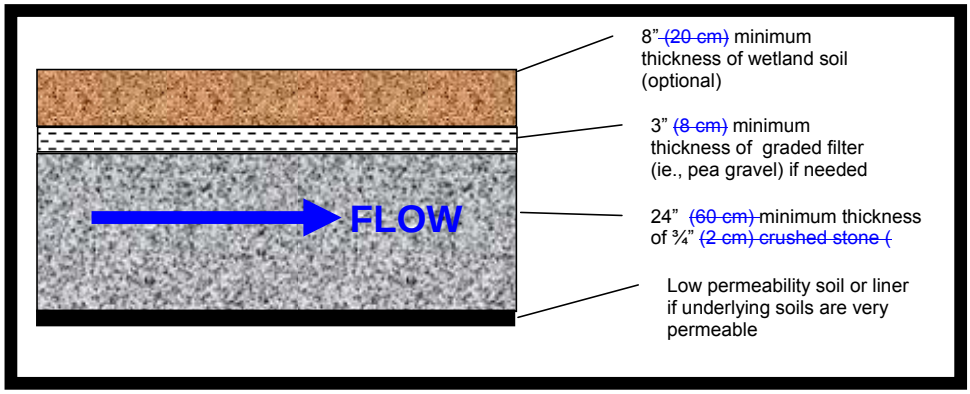

F.2.3 Gravel WVTS Testing Specifications

Gravel WVTSs that are designed with concrete chambers are to be tested for watertightness prior to placement of gravel. The systems should be tested for watertightness using the US EPA test procedures as described below and included in the Onsite Wastewater Treatment Systems Manual (USEPA, 2002). Hydrostatic or vacuum tests, and manway risers and inspection ports should be included in the test. The professional association representing the materials industry of the type of tank construction (e.g., the National Pre-cast Concrete Association) should be contacted to establish the appropriate testing criteria and procedures. Test criteria for precast concrete are presented below in Table F-2.

Table F-2 Watertightness Testing Procedure/Criteria for Precast Concrete Tanks (USEPA, 2002)

Standard	Hydrostatic test		Vacuum test	
	Preparation	Pass/fail criterion	Preparation	Pass/fail criterion
C 1227, ASTM (1993)	Seal tank, fill with water, and let stand for 24 hours. Refill tank.	Approved if water level is held for 1 hour	Seal tank and apply a vacuum of 2 in. Hg.	Approved if 90% of vacuum is held for 2 minutes.
NPCA (1998)	Seal tank, fill with water, and let stand for 8 to 10 hours. Refill tank and let stand for another 8 to 10 hours.	Approved if no further measurable water level drop occurs	Seal tank and apply a vacuum of 4 in. Hg. Hold vacuum for 5 minutes. Bring vacuum back to 4 in. Hg.	Approved if vacuum can be held for 5 minutes without a loss of vacuum.

Formatted Table

Formatted: Font: 10 pt

Table F-3 Gravel WVTS Construction Inspection Checklist

Project:

Location:

Site Status:

Date:

Time:

Inspector:

CONSTRUCTION SEQUENCE	SATISFACTORY/ UNSATISFACTORY	COMMENTS
1. Pre-Construction/Materials and Equipment		
Pre-construction meeting		
Pipe and appurtenances on-site prior to construction and dimensions checked		
1. Material (including protective coating, if specified)		
2. Diameter		
3. Dimensions of outlet structure		
4. Required dimensions between water control structures (orifices, weirs, etc.) are in accordance with approved plans		
5. Barrel stub for prefabricated pipe structures at proper angle for design barrel slope		
6. Number and dimensions of prefabricated anti-seep collars		
7. Watertight connectors and gaskets		

Formatted Table

Formatted: Font: 10 pt

CONSTRUCTION SEQUENCE	SATISFACTORY/ UNSATISFACTORY	COMMENTS
8. Outlet drain valve		
Project benchmark near site		
Equipment for temporary de-watering		
2. Subgrade Preparation		
Area beneath practice stripped of all vegetation, topsoil, and organic matter		
3. Pipe Installation		
Method of installation detailed on plans		
A. Bed preparation		
Installation trench excavated with specified side slopes		
Stable, uniform, dry subgrade of relatively impervious material (If subgrade is wet, contractor shall have defined steps before proceeding with installation)		
Invert at proper elevation and grade		
B. Pipe placement		
Metal/plastic pipe		
1. Watertight connectors and gaskets properly installed		
2. Anti-seep collars properly spaced and having watertight connections to pipe		
3. Backfill placed and tamped by hand under "haunches" of pipe		

Formatted Table

Formatted: Font: 10 pt

CONSTRUCTION SEQUENCE	SATISFACTORY/ UNSATISFACTORY	COMMENTS
4. Remaining backfill placed in max. 8 inch lifts using small power tamping equipment until 2 ft cover over pipe is reached		
Concrete pipe		
1. Pipe set on blocks or concrete slab for pouring of low cradle		
2. Pipe installed with rubber gasket joints with no spalling in gasket interface area		
3. Excavation for lower half of anti-seep collar(s) with reinforcing steel set		
4. Entire area where anti-seep collar(s) will come in contact with pipe coated with mastic or other approved waterproof sealant		
5. Low cradle and bottom half of anti-seep collar installed as monolithic pour and of an approved mix		
6. Upper half of anti-seep collar(s) formed with reinforcing steel set		
7. Concrete for collar of an approved mix and vibrated into place		
8. Forms stripped and collar inspected for honeycomb prior to backfilling. Parge if necessary.		
C. Backfilling		
Fill placed in maximum 8-in lifts		

Formatted Table

Formatted: Font: 10 pt

CONSTRUCTION SEQUENCE	SATISFACTORY/ UNSATISFACTORY	COMMENTS
Backfill taken minimum 2 ft above top of anti-seep collar elevation before traversing with heavy equipment		
4. Outlet Structure Installation		
Outlet Structure located within embankment or at end of chamber		
A. Metal riser		
Riser base excavated or formed on stable subgrade to design dimensions		
Set on blocks to design elevations and plumbed		
Reinforcing bars placed at right angles and projecting into sides of riser		
Concrete poured so as to fill inside of riser to invert of barrel		
B. Pre-cast concrete structure		
Dry and stable subgrade		
Riser base set to design elevation		
If more than one section, no spalling in gasket interface area; gasket or approved caulking material placed securely		
Watertight and structurally sound collar or gasket joint where structure connects to pipe spillway		
C. Poured concrete structure		

Formatted Table

Formatted: Font: 10 pt

CONSTRUCTION SEQUENCE	SATISFACTORY/ UNSATISFACTORY	COMMENTS
Footing excavated or formed on stable subgrade, to design dimensions with reinforcing steel set		
Structure formed to design dimensions, with reinforcing steel set as per plan		
Concrete of an approved mix and vibrated into place		
Forms stripped & inspected for "honeycomb" prior to backfilling; parge if necessary		
5. Embankment Construction, if applicable		
Fill material		
Compaction		
Embankment		
1. Fill placed in specified lifts and compacted with appropriate equipment		
2. Constructed to design cross-section, side slopes and top width		
3. Constructed to design elevation plus allowance for settlement		
6. Impounded Area Construction		
Excavated / graded to design contours and side slopes, if applicable		
Inlet pipes have adequate outfall protection		
Forebay(s)		

Formatted Table

Formatted: Font: 10 pt

CONSTRUCTION SEQUENCE	SATISFACTORY/ UNSATISFACTORY	COMMENTS
Pour-in-place concrete chambers, if applicable		
7. Earth Emergency Spillway Construction, if applicable		
Spillway located in cut or structurally stabilized with riprap, gabions, concrete, etc.		
Excavated to proper cross-section, side slopes and bottom width		
Entrance channel, crest, and exit channel constructed to design grades and elev.		
8. Outlet Protection		
A. End section		
Securely in place and properly backfilled		
B. Endwall		
Footing excavated or formed on stable subgrade, to design dimensions and reinforcing steel set, if specified		
Endwall formed to design dimensions with reinforcing steel set as per plan		
Concrete of an approved mix and vibrated into place		
Forms stripped and structure inspected for “honeycomb” prior to backfilling; parge if necessary		
C. Riprap apron / channel		

Formatted Table

Formatted: Font: 10 pt

CONSTRUCTION SEQUENCE	SATISFACTORY/ UNSATISFACTORY	COMMENTS
Apron~~ /~~ /channel excavated to design cross-section with proper transition to existing ground		
Filter fabric in place		
Stone sized as per plan and uniformly place at the thickness specified		
9. Vegetative Stabilization		
Approved seed mixture		
Proper surface preparation and required soil amendments, if applicable		
Excelsior mat or other stabilization, as per plan		
10. Miscellaneous		
Drain for permanent pool maintenance		
Trash rack~~ /~~ /anti-vortex device secured to outlet structure		
Trash protection for low flow pipes, orifices, etc.		
Fencing (when required)		
Access road		
Set aside for clean-out maintenance		
11. Emergent Vegetation		
Approved pondscaping plan in place and budget for additional plantings		

Formatted Table

Formatted: Font: 10 pt

CONSTRUCTION SEQUENCE	SATISFACTORY/ UNSATISFACTORY	COMMENTS
Plants and materials ordered 6 months prior to construction		
Construction planned to allow for adequate planting and establishment of plant community		

Comments:

Actions to be Taken:

Formatted Table

Formatted: Font: 10 pt

F.3 Construction Standards/Specifications for Infiltration BMPs

F.3.1 Infiltration Trench/Chamber General Notes and Specifications

Infiltration trench or chamber systems may not receive run-off until the entire contributing drainage area to the infiltration system has received final stabilization.

1. Construction equipment and traffic shall be restricted from traveling over the infiltration trench or chamber areas to minimize compaction of the soil.

2. Excavate the infiltration trench/chamber to the design dimensions. Excavated materials shall be placed away from the trench/chamber sides to enhance trench wall stability. Large tree roots must be trimmed flush with the trench sides in order to prevent fabric puncturing or tearing of the filter fabric during subsequent installation procedures. The side walls of the trench/chamber shall be roughened where sheared and sealed by heavy equipment.

3. A Class "C" geotextile or better shall interface between the trench/chamber side walls and between the stone reservoir and gravel filter layers. A partial list of non-woven filter fabrics that meet the Class "C" criteria is contained below~~. Any alternative filter fabric must be approved by the local municipality.~~..

   Mirafi 180-N
   Amoco 4552
   WEBTEC N70
   GEOLON N70
   Carthage FX-80S

   The width of the geotextile must include sufficient material to conform to trench/chamber perimeter irregularities and for a 6-inch minimum top overlap. The filter fabric shall be tucked under the sand layer on the bottom of the infiltration trench/chamber for a distance of 6 to 12 inches. Stones or other anchoring objects should be placed on the fabric at the edge of the trench/chamber to keep the trench open during windy periods. When overlaps are required between rolls, the uphill roll should lap a minimum of 2 feet over the downhill roll in order to provide a shingled effect.

4. A 6-inch sand filter layer may be placed on the bottom of the infiltration trench/chamber in lieu of filter fabric, and shall be compacted using plate compactors. The sand for the infiltration trench shall be washed and meet AASHTO Std. M-43, Size No. 9 or No. 10. ~~Any alternative sand gradation must be approved by the Engineer or the local municipality.~~

5. The stone aggregate should be placed in lifts and compacted using plate compactors. A maximum loose lift thickness of 12 inches is recommended. The

Formatted Table

Formatted: Font: 10 pt

gravel (rounded "bank run" gravel is preferred) for the infiltration trench/chamber shall be washed and meet one of the following AASHTO Std. M-43; Size No. 2 or No. 3.

6. Infiltration chambers should consist of high molecular weight high density polyethylene (HDPE) and meet AASHTO H10 and H20 standards. Chambers should have repeating endwalls for internal support. Infiltration chambers must be constructed in accordance with manufacturer's specifications.

7. Following the stone aggregate placement, the filter fabric shall be folded over the stone aggregate to form a 6-in minimum longitudinal lap. The desired fill soil or stone aggregate shall be placed over the lap at sufficient intervals to maintain the lap during subsequent backfilling.

8. Care shall be exercised to prevent natural or fill soils from intermixing with the stone aggregate. All contaminated stone aggregate shall be removed and replaced with uncontaminated stone aggregate.

9. Voids can be created between the fabric and the excavation sides and shall be avoided. Removing boulders or other obstacles from the trench walls is one source of such voids; therefore, natural soils should be placed in these voids at the most convenient time during construction to ensure fabric conformity to the excavation sides.

10. Vertically excavated walls may be difficult to maintain in areas where soil moisture is high or where soft cohesive or cohesionless soils are predominate. These conditions may require laying back of the side slopes to maintain stability.

11. PVC should be in accordance with RIDOT specification section M.04 Drainage and the following provisions, as applicable. PVC distribution pipes shall be Schedule 40 and meet ASTM Std. D 1784. All fittings and perforations (1/2 inch in diameter) shall meet ASTM Std. D 2729. A perforated pipe shall be provided only within the infiltration trench/chamber and shall terminate 1 ft short of the infiltration trench wall. The end of the PVC pipe shall be capped.

12. Corrugated metal pipes should be in accordance with RIDOT specification section M.04 Drainage and the following provisions, as applicable. The corrugated metal distribution pipes shall conform to AASHTO Std. M-36 and shall be aluminized in accordance with AASHTO Std. M-274. Coat aluminized pipe in contact with concrete with an inert compound capable of effecting isolation of the deleterious effect of the aluminum on the concrete. Perforated distribution pipe shall be provided only within the infiltration trench/chamber and shall terminate 1 ft short of the infiltration trench wall. An aluminized metal plate shall be welded to the end of the pipe.

Formatted Table

Formatted: Font: 10 pt

13. Corrugated High Density Polyethylene (HDPE) pipe should be in accordance with RIDOT specification no. 701.02.1 – Non-Metallic Pipe and the following provisions, as applicable. HDPE pipe, couplings and fittings shall conform to the following: 4-10-in pipe shall meet the requirements of AASHTO M252 Type S, and 12in through 24in shall meet the requirements of AASHTO M294 Type S. Perforated distribution pipe shall be provided only within the infiltration trench/chamber and shall terminate 1 ft short of the infiltration trench wall. The end of the pipe shall be capped.

14. The observation well is to consist of 4- to 6-inch diameter PVC Schedule 40 pipe (ASTM Std. D 1784) with a cap set 6 inches above ground level and is to be located near the longitudinal center of the infiltration trench or chamber. Preferably the observation well will not be located in vehicular traffic areas. The pipe shall have a plastic collar with ribs to prevent rotation when removing cap. The screw top lid shall be a "Panella" type cleanout or equivalent with a locking mechanism or special bolt to discourage vandalism.

15. Distribution structures should be in accordance with RIDOT specification section 700 – Drainage and Selected Utility Accessories and the following provisions, as applicable. If a distribution structure with a wet well is used, a 4-inch PVC drain pipe shall be provided at opposite ends of the infiltration trench/chamber distribution structure. Two (2) cubic feet of porous backfill meeting AASHTO Std. M-43 Size No. 57 shall be provided at each drain.

16. If a distribution structure is used, the manhole cover shall be bolted to the frame.

NOTE: PVC pipe with a wall thickness classification of SDR-35 meeting ASTM standard D3034 is an acceptable substitution for PVC Schedule 40 pipe.

Formatted Table

Formatted: Font: 10 pt

Table F-4 Infiltration Trench/Chamber Construction Inspection Checklist

Project:

Location:

Site Status:

Date:

Time:

Inspector:

CONSTRUCTION SEQUENCE	SATISFACTORY/ UNSATISFACTORY	COMMENTS
1. Pre-Construction		
Pre-construction meeting		
Runoff diverted		
Soil permeability tested		
Groundwater / bedrock sufficient at depth		
2. Excavation		
Size and location		
Side slopes stable		
Excavation does not compact subsoils		
3. Filter Fabric Placement		
Fabric specifications		
Placed on bottom, sides, and top		

Formatted Table

Formatted: Font: 10 pt

CONSTRUCTION SEQUENCE	SATISFACTORY/ UNSATISFACTORY	COMMENTS
4. Aggregate Material		
Size as specified		
Clean / washed material		
Placed properly		
5. Observation Well		
Pipe size		
Removable cap / footplate		
Initial depth =_____feet		
6. Final Inspection		
Pretreatment facility in place		
Contributing watershed stabilized prior to flow diversion		
Outlet		

Comments:

Actions to be Taken:

Formatted Table

Formatted: Font: 10 pt

F.3.2 Infiltration Basins Notes and Specifications

1. The sequence of various phases of basin construction shall be coordinated with the overall project construction schedule. A program should schedule rough excavation of the basin with the rough grading phase of the project to permit use of the material as fill in earthwork areas. The partially excavated basin, however, cannot serve as a sedimentation basin.

   Specifications for basin construction should state: (1) the earliest point in progress when storm drainage may be directed to the basin, and (2) the means by which this delay in use is to be accomplished. Due to the wide variety of conditions encountered among projects, each should be separately evaluated in order to postpone use as long as is reasonably possible.

2. Initial basin excavation should be carried to within 1 foot of the final elevation of the basin floor. Final excavation to the finished grade should be deferred until all disturbed areas on the watershed have been stabilized or protected. The final phase excavation should remove all accumulated sediment. Relatively light-tracked equipment is recommended for this operation to avoid compaction of the basin floor. After the final grading is completed, the basin provides a well-aerated, highly porous surface texture.

3. Infiltration basins may be lined with a 6- to 12-inch layer of filter material such as coarse sand (AASHTO Std. M-43, Sizes 9 or 10) to help prevent the buildup of impervious deposits on the soil surface. The filter layer can be replaced or cleaned when it becomes clogged. When a 6-inch layer of coarse organic material is specified for discing (such as hulls, leaves, stems, etc.) or spading into the basin floor to increase the permeability of the soils, the basin floor should be soaked or inundated for a brief period, then allowed to dry subsequent to this operation. This induces the organic material to decay rapidly, loosening the upper soil layer.

4. Establishing dense vegetation on the basin side slopes and floor is recommended. A dense vegetative stand will not only prevent erosion and sloughing, but will also provide a natural means of maintaining relatively high infiltration rates. Erosion protection of inflow points to the basin shall also be provided.

5. Selection of suitable vegetative materials for the side slope and all other areas to be stabilized with vegetation and application of required lime, fertilizer, etc. shall be done in accordance with the ~~NRCS Standards and Specifications.~~RIDOT specification section L.01.

6. Grasses of the fescue family are recommended for seeding primarily due to their adaptability to dry sandy soils, drought resistance, hardiness, and ability to withstand brief inundations. The use of fescues will also permit long intervals between mowings. This is important due to the relatively steep slopes that make mowing difficult. Mowing 2 times a year, once in June and September, is generally satisfactory. Re-fertilization with 10-6-4 ratio fertilizer at a rate of 500 lb per acre (11

Formatted Table

Formatted: Font: 10 pt

lb per 1000 sq ft) may be required the second year after seeding.

Formatted Table

Formatted: Font: 10 pt

Table F-5 Infiltration Basin Construction Inspection Checklist

Project:

Location:

Site Status:

Date:

Time:

Inspector:

CONSTRUCTION SEQUENCE	SATISFACTORY/ UNSATISFACTORY	COMMENTS
1. Pre-Construction		
Runoff diverted		
Soil permeability tested		
Groundwater / bedrock depth		
2. Excavation		
Size and location		
Side slopes stable		
Excavation does not compact subsoils		
3. Embankment		
Barrel		
Anti-seep collar or Filter diaphragm		
Fill material		
4. Final Excavation		

Formatted Table

Formatted: Font: 10 pt

CONSTRUCTION SEQUENCE	SATISFACTORY/ UNSATISFACTORY	COMMENTS
Drainage area stabilized		
Sediment removed from facility		
Basin floor tilled		
Facility stabilized		
5. Final Inspection		
Pretreatment facility in place		
Inlets / outlets		
Contributing watershed stabilized before flow is routed to the facility		

Comments:

Actions to be Taken:

Formatted Table

Formatted: Font: 10 pt

F.4 Construction Standards/Specifications for Alternative Paving Surfaces

F.4.1 Porous Asphalt Notes and Specifications

The specifications listed herein were developed by the UNHSC (~~2008).~~2009) for UNHSC-related projects and represent the author's best professional judgment. No assurances are given for projects other than the intended application. These design specifications are not a substitute for licensed, qualified engineering oversight and should be reviewed, and adapted as necessary.

PART 1 GENERAL

1.1 DESCRIPTION

A. This specification is intended to be used for porous asphalt pavement in parking lot applications. Stormwater management functions of porous asphalt installations include water quality treatment, peak flow reduction, storm volume reduction via groundwater recharge, and increased hydrograph time lag~~ in flow~~. This specification is intended for a cold climate application ~~(~~based upon the field experience at the UNHSC porous asphalt parking lot located in Durham, New Hampshire~~), but~~, however the specification can be adapted to projects elsewhere provided that selection of materials and system design reflects local conditions, constraints, and objectives.

B. The work of this Section includes subgrade preparation, installation of the underlying porous media beds, and porous asphalt mix (mix) design, production, and installation. Porous media beds refer to the ~~beds~~material layers underlying the porous asphalt pavement. Porous asphalt pavement refers to the compacted mix of modified asphalt~~ binder and~~ , aggregate~~.~~, and additives.
~~B.~~

C. The porous asphalt pavement specified herein is modified after the National Asphalt Pavement Association (NAPA) specification outlined in *Design, Construction, and Maintenance Guide for Porous Asphalt Pavements, Information Series 131* (2003) and *Design, Construction, and Maintenance of Open-Graded Friction Courses, Information Series 115* (2002).

D. Alternative specifications for mix, such as Open Graded Friction Courses (OGFC) from Federal Agencies or ~~state Departments~~Rhode Island Department of Transportation (RIDOT), may be used if approved by the Engineer. The primary requirements for the specifications of the mix are performance grade (PG) asphalt binder, binder content, binder draindown, aggregate gradation, air void content, ~~and~~ retained tensile strength (TSR).

Formatted: Font: Bold

Formatted: Font: Arial, Bold

Formatted: Heading 2,Heading 2-swManual, Indent: Left: 0", Hanging: 0.75"

Formatted: Font: Arial, Bold, Italic

Formatted: List Paragraph, Numbered + Level: 1 + Numbering Style: A, B, C, … + Start at: 1 + Alignment: Left + Aligned at: 0.25" + Indent at: 0.5", Widow/Orphan control, Adjust space between Latin and Asian text, Adjust space between Asian text and numbers

Formatted: List Paragraph, No bullets or numbering, Widow/Orphan control, Adjust space between Latin and Asian text, Adjust space between Asian text and numbers

Formatted: List Paragraph, Numbered + Level: 1 + Numbering Style: A, B, C, … + Start at: 1 + Alignment: Left + Aligned at: 0.25" + Indent at: 0.5", Widow/Orphan control, Adjust space between Latin and Asian text, Adjust space between Asian text and numbers

Formatted: List Paragraph, Numbered + Level: 1 + Numbering Style: A, B, C, … + Start at: 1 + Alignment: Left + Aligned at: 0.25" + Indent at: 0.5", Widow/Orphan control, Adjust space between Latin and Asian text, Adjust space between Asian text and numbers

Formatted Table

Formatted: Font: 10 pt

1.2 SUBMITTALS

A. Submit a list of materials proposed for work under this Section including the name and address of the materials producers and the locations from which the materials are to be obtained.

B. Submit certificates, signed by the materials producers and the relevant subcontractors, stating that materials meet or exceed the specified requirements, for review and approval by the Engineer.

C. Submit samples of materials for review and approval by the Engineer. For mix materials, samples may be submitted only to the QA inspector with the Engineer's approval.

~~D.~~ Submittal requirements for samples and certificates are summarized in ~~Table F-6 and discussed in further detail in the Materials section.~~

~~**Table F-6 Submittal requirements.**~~

Material or Pavement Course*	Properties to be Reported on Certificate**
choker course, reservoir course	gradation, max. wash loss, min. durabity index, max. abrasion loss; air voids (reservoir course)
filter course	gradation, permeability
filter blanket	gradation
geotextile filter fabric	manufacturer's certification
striping paint	certificate
binder	PGAB certification
~~coarse aggregate~~	~~gradation, wear, fractured faces, fractured & elongated~~
fine aggregate	gradation, plasticity index
silicone	manufacturer's certification
fibers (optional)	manufacturer's certification
mineral filler (optional)	manufacturer's certification
fatty amines (optional anti-strip)	manufacturer's certification
hydrated lime (optional anti-strip)	manufacturer's certification

*Samples of each material shall be submitted to the Engineer (or QA inspector for mix).
**At a minimum; more material properties may be required (refer to Materials section).

D. 1.3 QC/QA

1.3 QC/QA

A. Use adequate numbers of skilled workers who are thoroughly trained and experienced in the necessary crafts and who are completely familiar with the specified requirements and the methods needed for proper performance of the work in this section.

Formatted: Font: Arial, Bold

Formatted: Font: Arial, Bold, Italic

Formatted: Heading 2,Heading 2-swManual, Indent: Left: 0", Hanging: 0.75"

Formatted: List Paragraph, Indent: Left: 0.25", Numbered + Level: 1 + Numbering Style: A, B, C, … + Start at: 1 + Alignment: Left + Aligned at: 0.31" + Indent at: 0.56", Widow/Orphan control, Adjust space between Latin and Asian text, Adjust space between Asian text and numbers

Formatted: List Paragraph, Indent: Left: 0.25", Numbered + Level: 1 + Numbering Style: A, B, C, … + Start at: 1 + Alignment: Left + Aligned at: 0.31" + Indent at: 0.56", Widow/Orphan control, Adjust space between Latin and Asian text, Adjust space between Asian text and numbers

Formatted: List Paragraph, Indent: Left: 0.25", Numbered + Level: 1 + Numbering Style: A, B, C, … + Start at: 1 + Alignment: Left + Aligned at: 0.31" + Indent at: 0.56", Widow/Orphan control, Adjust space between Latin and Asian text, Adjust space between Asian text and numbers

Formatted: Font: Arial

Formatted: List Paragraph, Indent: Left: 0.25", Numbered + Level: 1 + Numbering Style: A, B, C, … + Start at: 1 + Alignment: Left + Aligned at: 0.31" + Indent at: 0.56"

Formatted: Font: Arial

Formatted: Font: Arial

Formatted: List Paragraph, Numbered + Level: 1 + Numbering Style: A, B, C, … + Start at: 1 + Alignment: Left + Aligned at: 0.25" + Indent at: 0.5", Widow/Orphan control, Adjust space between Latin and Asian text, Adjust space between Asian text and numbers

Formatted Table

Formatted: Font: 10 pt

B. Codes and Standards - All materials, methods of construction and workmanship shall conform to applicable requirements of AASHTO ~~and~~ ASTM Standards, RIDOT Standard Specifications for Road and Bridge Construction, latest revised (including supplements and updates), or other standards as specified.
~~B.~~

C. QC/QA requirements for production of mix are discussed in the Materials section, and for construction of the porous media beds and paving in the Execution section.

Table F-6 Submittal requirements.

Material or Pavement Course*	Properties to be reported on Certificate**
choker course, reservoir course	gradation, max. wash loss, min. durability index, max. abrasion loss, air voids (reservoir course)
filter course	gradation, permeability/ sat. hydraulic conductivity
filter blanket	gradation
geotextile filter fabric	manufacturer's certification, AOS/EOS, tensile strength
striping paint	certificate
binder	PGAB certification
coarse aggregate	gradation, wear, fracture faces (fractured and elongated)
fine aggregate	gradation
silicone	manufacturer's certification
Fibers (optional)	manufacturer's certification
mineral filler (optional)	manufacturer's certification
fatty amines (optional anti-strip)	manufacturer's certification
hydrated lime (optional anti-strip)	manufacturer's certification

* Samples of each material shall be submitted to the Engineer (or QA inspector for mix). These samples must be in sufficient volume to perform the standardized tests for each material.
** At a minimum, more material properties may be required (refer to Materials Section).

1.4 PROJECT CONDITIONS

A. Site Assessment should be performed per the steps outlined in IS 131 (NAPA, 2003).

B. Construction Phasing should be performed as outlined in IS 131 (NAPA, 2003).

C. Protection of Existing Improvements

~~1.~~1. Protect adjacent work from the unintended dispersal/splashing of pavement materials. Remove all stains from exposed surfaces of pavement, structures, and grounds. Remove all waste and spillage. If necessary, limit access to adjacent work/structures with appropriate signage and/or barriers.

Formatted: List Paragraph, No bullets or numbering, Widow/Orphan control, Adjust space between Latin and Asian text, Adjust space between Asian text and numbers

Formatted: List Paragraph, Numbered + Level: 1 + Numbering Style: A, B, C, … + Start at: 1 + Alignment: Left + Aligned at: 0.25" + Indent at: 0.5", Widow/Orphan control, Adjust space between Latin and Asian text, Adjust space between Asian text and numbers

Formatted: Font: Arial, Bold

Formatted: Heading 2,Heading 2-swManual, Indent: Left: 0", Hanging: 0.75"

Formatted: Font: Arial, Bold, Italic

Formatted: List Paragraph, Numbered + Level: 1 + Numbering Style: A, B, C, … + Start at: 1 + Alignment: Left + Aligned at: 0.25" + Indent at: 0.5", Widow/Orphan control, Adjust space between Latin and Asian text, Adjust space between Asian text and numbers

Formatted: List Paragraph, Numbered + Level: 1 + Numbering Style: A, B, C, … + Start at: 1 + Alignment: Left + Aligned at: 0.25" + Indent at: 0.5", Widow/Orphan control, Adjust space between Latin and Asian text, Adjust space between Asian text and numbers

Formatted: Underline

Formatted: List Paragraph, Numbered + Level: 1 + Numbering Style: A, B, C, … + Start at: 1 + Alignment: Left + Aligned at: 0.25" + Indent at: 0.5", Widow/Orphan control, Adjust space between Latin and Asian text, Adjust space between Asian text and numbers

Formatted: List Paragraph, Numbered + Level: 2 + Numbering Style: 1, 2, 3, … + Start at: 1 + Alignment: Left + Aligned at: 0.75" + Indent at: 1", Widow/Orphan control, Adjust space between Latin and Asian text, Adjust space between Asian text and numbers

Formatted Table

Formatted: Font: 10 pt

~~2.~~2. Proper erosion and sediment control practices shall be provided in accordance with existing regulations. Do not damage or disturb existing improvements or vegetation. Provide suitable protection where required before starting work and maintain protection throughout the course of the work. This includes the regular, appropriate inspection and maintenance of the erosion and sediment control measures.

~~3.~~3. Restore damaged ~~improvements~~areas, including existing pavement on or adjacent to the site that has been damaged as a result of construction work, to their original condition or repair as directed to the satisfaction of the Engineer at no additional cost.

D. Safety and Traffic Control

~~1.~~1. Notify and cooperate with local authorities and other organizations having jurisdiction when construction work will interfere with existing roads and traffic.

~~2.~~2. Provide temporary barriers, signs, warning lights, flaggers, and other protections as required to assure the safety of persons and vehicles around and within the construction area and to organize the smooth flow of traffic.

E. Weather Limitations

~~1.~~1. Porous asphalt, Open graded friction course, or dense-mixed asphalt shall not be placed between November 15 and March 15, or when the ambient air temperature at the pavement site in the shade away from artificial heat is below 16 °C (60 °F) or when the actual ground temperature is below 10 °C (50 °F). Only the Engineer may adjust the air temperature requirement or extend the dates of the pavement season.

~~2.~~2. The Contractor shall not pave on days when rain is forecast for the day, unless a change in the weather results in favorable conditions as determined by the Engineer.

1.5 REFERENCES

A. *General Porous Asphalt Bituminous Paving and Groundwater Infiltration Beds,* specification by UNH Stormwater Center, February, 2005.

B. *Design, Construction, and Maintenance Guide for Porous Asphalt Pavements, Information Series 131*, National Asphalt Pavement Association (NAPA), 2003.

C. *Design, Construction, and Maintenance of Open-Graded Friction Courses, Information Series 115*, NAPA, 2002.

D. *Annual Book of ASTM Standards*, American Society for Testing and Materials, Philadelphia, PA, 1997 or latest edition.

E. *Standards of the American Association of State Highway and Transportation Officials* (AASHTO), 1998 or latest edition.

~~F. Section 401- Plant Mix Pavements – General, in Standard Specifications for Road and Bridge Construction – State of New Hampshire Department of Transportation, 2006.~~

~~G.~~F. *Section 02725 - General Porous Pavement and Groundwater Infiltration Beds*, specification from NAPA Porous Asphalt Seminar handout, Cahill

Formatted: Underline

Formatted: List Paragraph, Numbered + Level: 1 + Numbering Style: A, B, C, … + Start at: 1 + Alignment: Left + Aligned at: 0.25" + Indent at: 0.5", Widow/Orphan control, Adjust space between Latin and Asian text, Adjust space between Asian text and numbers

Formatted: List Paragraph, Numbered + Level: 1 + Numbering Style: 1, 2, 3, … + Start at: 1 + Alignment: Left + Aligned at: 0.75" + Indent at: 1", Widow/Orphan control, Adjust space between Latin and Asian text, Adjust space between Asian text and numbers

Formatted: Underline

Formatted: List Paragraph, Numbered + Level: 1 + Numbering Style: A, B, C, … + Start at: 1 + Alignment: Left + Aligned at: 0.25" + Indent at: 0.5", Widow/Orphan control, Adjust space between Latin and Asian text, Adjust space between Asian text and numbers

Formatted: List Paragraph, Numbered + Level: 1 + Numbering Style: 1, 2, 3, … + Start at: 1 + Alignment: Left + Aligned at: 0.75" + Indent at: 1", Widow/Orphan control, Adjust space between Latin and Asian text, Adjust space between Asian text and numbers

Formatted: Font: Bold

Formatted: Space Before: 12 pt, After: 3 pt

Formatted: Font: Italic

Formatted: Font: Italic

Formatted: Font: Italic

Formatted: Font: Italic

Formatted: Font: Italic

Formatted: Font: Italic

Formatted Table

Formatted: Font: 10 pt

Associates, Inc., 2004.
~~H.~~G. *Correlations of Permeability and Grain Size*, Russell G. Shepherd, Groundwater 27 (5), 1989.
~~I.~~H. *Groundwater*, R. Allan Freeze and John A. Cherry, 1979.

PART 2 PRODUCTS

2.1 MATERIALS

A. Porous Media Infiltration Beds

~~1. The~~Below the porous asphalt itself are located the porous media infiltration beds ~~include, as indicated in~~

~~2. Figure F-2,~~(Figure F-2), from top to bottom~~,~~: a 4" – 8" (10 - 20 cm) (minimum) thick layer of choker course of washed crushed stone~~, a 12"~~ (8" is preferable to alleviate compaction issues with the porous asphalt); an 8" to 12" (20 cm to 30 cm) minimum thickness layer of filter course of poorly graded sand (a.k.a~~.~~., bankrun gravel~~), 3"~~ or modified 304.1); 3" (8 cm) minimum thickness filter blanket that is an intermediate setting bed (pea gravel~~),~~); and a reservoir course of washed crushed stone, thickness dependant on required storage and underlying native materials. Alternatively, the pea gravel layer could be thickened and used as the reservoir course depending upon subsoil suitability. This alternative simplifies subbase construction. For lower permeability native soils, perforated or slotted drain pipe is located in the stone reservoir course for drainage. This drain pipe can be daylighted to other stormwater management infrastructure. The fine gradation of the filter course is for enhanced filtration and delayed infiltration. The high air void content of the uniformly graded washed crushed stone reservoir course: maximizes storage of infiltrated water thereby allowing more time for water to infiltrate between storms; and creates a capillary barrier ~~to~~ that arrests vertical water movement and in doing so prevents winter freeze-thaw and heaving. The filter blanket is placed to prevent downward migration of filter course material into the reservoir course. The optional underdrain in the reservoir course is for hydraulic relief (typically raised off of the bottom of the reservoir stone layer for enhanced groundwater recharge). Nonwoven geotextile filter fabric (geotextile) is used only for stabilizing the sloping sides of the porous asphalt system excavation and not to be used on the bottom of the system unless needed for structural reasons.

1. Choker Course

~~3.~~ Material for the choker course and reservoir course shall meet the following:

Maximum Wash Loss of 0.5%
Minimum Durability Index of 35
Maximum Abrasion Loss of 10% for 100 ~~revs.~~revolutions, and max~~.~~imum of 50% for 500 ~~revs~~revolutions.

Formatted: Font: Italic
Formatted: Font: Italic
Formatted: Font: Bold
Formatted: Font: Arial, Bold
Formatted: Font: Arial, Bold, Italic
Formatted: Heading 2,Heading 2-swManual, Indent: Left: 0", Hanging: 0.75"
Formatted: Font: Bold
Formatted: Indent: Hanging: 0.25", Space Before: 12 pt, After: 3 pt
Formatted: No underline
Formatted: Indent: Left: 0.25", No bullets or numbering, Widow/Orphan control, Adjust space between Latin and Asian text, Adjust space between Asian text and numbers
Formatted: Default Paragraph Font, No underline
Formatted: Indent: Left: 0.5", No bullets or numbering, Widow/Orphan control, Adjust space between Latin and Asian text, Adjust space between Asian text and numbers
Formatted: Underline
Formatted: Indent: Left: 0.75"
Formatted: Indent: Left: 0.5"
Formatted: Indent: First line: 0"
Formatted: Indent: Left: 0.5"
Formatted Table
Formatted: Font: 10 pt

Material for the choker course and reservoir course shall have the AASHTO No. 57 and AASHTO No. 3 gradations, respectively, as specified in Table F-7. If the AASHTO No. 3 gradation cannot be met, AASHTO No. 5 is acceptable with approval of the Engineer. AASHTO no. 3 is also suitable for the choker course.

4. **Reservoir course thickness** is dependent upon the following criteria:

   a. A 4" minimum thickness of reservoir course is installed as a capillary barrier for frost heave protection at interface between subbase and native materials,

   b. Underlying native materials are either well drained (Hydrologic Group A and B soils) or subdrains should be installed to insure subbase is well drained,

   c. Subdrains, if included, are elevated at minimum 4" from bottom to provide storage and infiltration for 1" water quality volume,

   d. Subbase materials have sufficient void space to store the design storm,
      Example: 10-year storm, 5.1" rainfall depth, 0.3 reservoir void space
      subbase thickness ≥ 5.1" /0.3 ≥ 17"

   e. Pavement and subbase thickness are >= 0.65 * design frost depth for area.
      Example: 48"=$D_{maximum\ frost}$: 32">0.65(48")

5. **Optional Liner** only recommended for aquifer protection from inappropriate land uses, to be located at interface between subbase and native materials is dependent upon the following:

   a. As with any infiltration system, care must be taken when siting porous asphalt systems close to locations where hazardous materials are handled or where high contaminant loading may threaten groundwater. In such cases, the systems can be lined to prevent infiltration into groundwater while preserving water quality and peak flow reduction benefits.

   b. Refer to state guidelines regarding the use of infiltration systems

   c. Suitable liners may include Hydrologic Group D soils, HDPE liners, or suitable equivalent. Refer to state guidelines regarding selection of impermeable liners.

   d. Filter fabrics or geotextile liners are not recommended for use on bottom of system if designing for infiltration. Filter fabric usage in stormwater

Formatted Table

Formatted: Font: 10 pt

~~filtration has been known to clog prematurely. Graded stone filter blankets are recommended instead.~~

~~Figure F-2 Typical Cross-Section for Pervious Pavement System~~

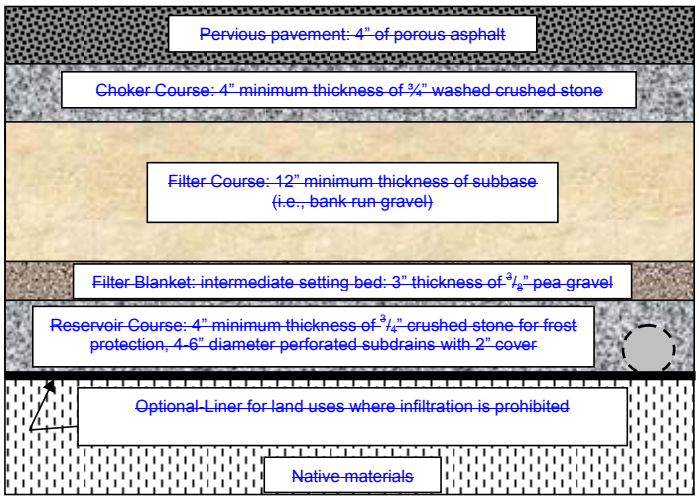

~~Table F-7 Gradations of choker, filter, and reservoir course materials.~~

U.S. Standard Sieve Size	Percent Passing (%)			
	Choker Course (AASHTO No. 57)	Filter Coarse (NHDOT 304.1)	Reservoir Course (AASHTO No. 3)	Res. Course Alt.* (AASHTO No. 5)
6" (150mm)		100		
2 ½" (63mm)	-		100	-
2" (50mm)	-		90-100	-
1 ½" (37.5mm)	100		35-70	100
~~1" (25mm)~~	~~95-100~~		~~0-15~~	~~90-100~~
3/4" (19mm)	-		-	20-55
½" (12.5mm)	25-60		0-5	0-10
3/8" (9.5mm)	-		-	0-5
#4 (4.75mm)	0-10	75-100	-	-
#8 (2.36mm)	0-5	-	-	-
#200 (0.075mm)	-	0-12	-	-

*Alternate gradations (e.g. AASHTO No. 5) may be accepted Engineer's approval.

2. Filter course material

Filter course material shall have a hydraulic conductivity (also referred to as coefficient of permeability) of 10 to 60 ft/day at ~~92%~~95% standard proctor compaction unless otherwise approved by the Engineer. Great care needs to be used to not over-compact materials ~~due to~~. Over-compaction results with loss of infiltration capacity. The filter co~~a~~urse material is commonly referred to as a bankrun gravel ~~(NHDOT 304.1).~~. In order to select an appropriate gradation,

Formatted: Default Paragraph Font, Font: Not Bold, No underline

Formatted: Indent: Left: 0.5"

Formatted Table

Formatted: Font: 10 pt

coefficient of permeability may be estimated through an equation that relates gradation to permeability, such as described in *Correlations of Permeability and Grain Size* (Shepherd, 1989) or in *Section 8.7 Estimation of Saturated Hydraulic Conductivity* (Freeze and Cherry, 1979). ~~Coefficient of permeability for the selected filter course material shall~~The hydraulic conductivity should be ~~measured~~determined by ASTM ~~D5084~~D2434 and reported to the Engineer.

3. Filter blanket material

~~6.~~ Filter blanket material between the filter course and the reservoir course shall be an intermediate size between the finer filter course above, and the coarser reservoir course below, for the purpose of preventing the migration of a fine setting bed into the coarser reservoir material. An acceptable gradation shall be calculated based on selected gradations of the filter course and reservoir course using criteria outlined in the *HEC 11* (Brown and Clyde, 1989). A pea-gravel with a median particle diameter of 3/8" (9.5 mm) is commonplace.

4. Reservoir Coarse

Reservoir Coarse thickness is dependent upon the following criteria (that vary from site to site):

a. A 4" (10 cm) minimum thickness of reservoir course acts as a capillary barrier for frost heave protection. The reservoir course is located at the interface between subbase and native materials.

b. 4-in. (10 cm) minimum thickness if the underlying native materials are either well drained (Hydrologic Group A soils).

c. 8-in. (30 cm) minimum thickness if subdrains are installed. Subdrains insure that the subbase is well drained

d. Subdrains, if included, are elevated a minimum of 4" (10 cm) from the reservoir course bottom to provide storage and infiltration for the water quality volume. If the system is lined ,

e. Subbase thickness is determined from subbase materials having sufficient void space to store the design storm,

> **Example:** If the precipitation is 5.1" (13 cm) of rainfall depth, and the reservoir void space is 30%, then the minimum subbase thickness = 5.1"/0.3 = 17" (43.2 cm).

f. Pavement system and subbase thickness are > 0.65 * design frost depth for area.

Formatted: Heading 3 Char,3SWManual Char, Font: Bold, Not Highlight

Formatted: Heading4, Indent: Left: 0.5", Hanging: 0.25", Numbered + Level: 1 + Numbering Style: 1, 2, 3, … + Start at: 1 + Alignment: Left + Aligned at: 0.5" + Tab after: 0.19" + Indent at: 1", Tab stops: 0.75", Left

Formatted: Default Paragraph Font, Font: Not Bold, No underline

Formatted Table

Formatted: Font: 10 pt

Example: N. Smithfield, RI, 42" (107 cm) = $D_{maximum\ frost}$, therefore, the *minimum* depth to the bottom of the subbase = 0.65(42") = 27" (69 cm).

5. Optional Bottom Liner

Bottom Liner is only recommended for aquifer protection or infiltration prevention. This liner is to be located at the interface between subbase and native materials and is dependent upon the following:

a. As with any infiltration system, care must be taken when siting porous asphalt systems close to locations where hazardous materials are handled/trafficked, or where high contaminant loading may threaten groundwater, or where infiltration is undesirable (nearby foundations, slope stability, etc.). See Section 5.3.1.

b. Suitable liners may include Hydrologic Group D soils, HDPE liners, or suitable equivalent. See Section 5.2.2 (WVTS liners).

Figure F-2 Typical Parking Area Cross-Section for Pervious Pavement System

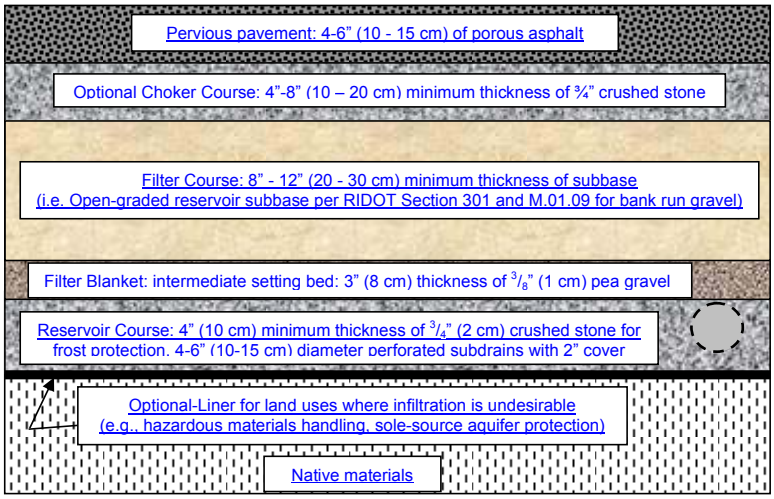

Table F-7 Gradations and compaction of choker, filter, and reservoir course materials.

US Standard Sieve Size (inches/mm)	Percent Passing (%)			
	Choker Course (AASHTO No. 57)	Filter Course (Modified NHDOT 304.1)	Reservoir Course (AASHTO No.3)	Reservoir Course Alternative* (AASHTO No.5)
6/150	-	100	-	
2½/63	-		100	-

Formatted Table

Formatted: Font: 10 pt

US Standard Sieve Size (inches/mm)	**Percent Passing (%)**			
	Choker Course (AASHTO No. 57)	**Filter Course (Modified NHDOT 304.1)**	**Reservoir Course (AASHTO No.3)**	**Reservoir Course Alternative* (AASHTO No.5)**
2 /50	-		90 – 100	-
1½/37.5	100		35 – 70	100
1/25	95 - 100		0 – 15	90 – 100
¾/19	-		-	20 - 55
½/12.5	25 - 60		0 - 5	0 - 10
3/8/9.5	-		-	0 - 5
#4/4.75	0 - 10	70-100	-	
#8/2.36	0 - 5		-	
#200/0.075		0 – 6**		
% Compaction ASTM D698 / AASHTO T99	95	95	95	95

* Alternate gradations (e.g. AASHTO No. 5) may be accepted upon Engineer's approval.
** Preferably less than 4% fines

c. Filter fabrics or geotextile liners are not recommended for use on the bottom of the porous asphalt system (at the base of the stone reservoir subbase) if designing for infiltration. Filter fabric usage in stormwater filtration has been known to clog prematurely. Graded stone filter blankets are recommended instead.

d. Geotextile filter fabrics may be used if designing on poor structural, and low conductivity soils. Fabric usage would be limited to the bottom and sides of the excavation. No fabric is to be used within the subbase, only on the perimeter.

6. Non-woven geotextile filter fabric

~~7.~~ Filter fabric is *only recommended* for the sloping sides ~~only~~of the porous asphalt system excavation. It shall be Mirafi 160N, or approved equal and shall conform to the specifications in Table F-8. Mirafi ® 160N is a non-woven geotextile composed of polypropylene fibers, which are formed into a stable network such that the fibers retain their relative position. 160N is inert to biological degradation and resists naturally encountered chemicals, alkalis, and acids.

Formatted: Font: Arial, No underline

Formatted: Heading4, Indent: Left: 0.75", First line: 0"

Formatted: Default Paragraph Font, Font: Not Bold

Formatted: Font: Arial

Formatted: Indent: Left: 0.5", No bullets or numbering, Widow/Orphan control, Adjust space between Latin and Asian text, Adjust space between Asian text and numbers

Formatted Table

Formatted: Font: 10 pt

~~Table F-8 Non-woven geotextile filter fabric properties.~~

Mechanical Properties	Test Method	Unit	Min Avg Roll Value MD	CD
Grab Tensile Strength	ASTM D 4632	kN (lbs)	0.71 (160)	0.71 (160)
Grab Tensile Elongation	ASTM D 4632	%	50	50
Trapezoid Tear Strength	ASTM D 4533	kN (lbs)	0.27 (60)	0.27 (60)
Mullen Burst Strength	ASTM D 3786	kPa (psi)	2100 (305)	
Puncture Strength	ASTM D 4833	kN (lbs)	0.42 (95)	
Apparent Opening Size (AOS)	ASTM D 4751	mm (U.S. Sieve)	0.212 (70)	
Permittivity	ASTM D 4491	sec-1	1.4	
Permeability	ASTM D 4491	cm/sec	0.22	
Flow Rate	ASTM D 4491	lpm/m^2 (gpm/ft^2)	4477 (110)	
UV Resistance (at 500 hours)	ASTM D 4355	% strength retained	70	

Physical Properties	Test Method	Unit	Typical Value
Weight	ASTM D 5261	g/m^2 (oz/yd^2)	217 (6.4)
Thickness	ASTM D 5199	mm (mils)	1.9 (75)
Roll Dim. (width x length)	-	m (ft)	4.5 x 91 (15 x 300)
Roll Area	-	m^2 (yd^2)	418 (500)
Estimated Roll Weight	-	kg (lb)	99 (217)

7. Alternative ~~materials~~Applications and Residential Driveways.

~~8.~~ The recommendations above are based on a commercial parking application for both traffic and contaminant load. Alternative applications such as residential driveways and low use applications may justify the use of alternative subbase thicknesses for the porous media beds, filter blanket, and ~~geotextile may be substituted at the discretion of~~ geotextiles. Residential driveway applications have been designed with a subbase limited to only an 8" compacted choker course. Variations should consider structural load requirements for material thickness, and contaminant load for filter course thickness. A reduced total system thickness will subject the ~~Engineer.~~pavement to greater freeze thaw susceptibility.

Formatted: Normal,Normal-swmanual, Indent: Left: 0.5"

Formatted: Default Paragraph Font, Font: Not Bold

Formatted: Indent: Left: 0.5", No bullets or numbering, Widow/Orphan control, Adjust space between Latin and Asian text, Adjust space between Asian text and numbers

Formatted: Font: Bold

Formatted: Normal,Normal-swmanual

~~B.~~ **Table F-8 Non-woven geotextile filter fabric properties.**

Mechanical Properties	**Test Method**	Unit	**Minimum Average Roll Values**	
			MD*	CD**
Grab Tensile Strength	ASTM D 4632	kN (lbs)	0.71 (160)	0.71 (160)
Grab Tensile Elongation	ASTM D 4632	%	50	50
Trapezoid Shear Strength	ASTM D 4533	kN (lbs)	0.27 (60)	0.27 (60)
Mullen Burst Strength	ASTM D	kPa (psi)	2100 (305)	2100 (305)

Formatted Table

Formatted: Font: 10 pt

Mechanical Properties	**Test Method**	Unit	**Minimum Average Roll Values**	
			MD*	CD**
	3786			
Puncture Strength	ASTM D 4833	kN (lbs)	0.42 (95)	0.42 (95)
Apparent Opening Size (AOS)	ASTM D 4751	mm (US Sieve)	0.212 (70)	0.212 (70)
Permittivity	ASTM D 4491	sec^{-1}	1.4	1.4
Permeability	ASTM D 4491	cm/sec	0.22	0.22
Flow Rate	ASTM D 4491	lpm/m^2 (gpm/ft^2)	4,477 (110)	4,477 (110)
UV Resistance (at 500 hours)	ASTM D 4355	% strength retained	70	70

Physical Properties	**Test Method**	**Unit**	**Typical Value**
Weight	ASTM D 5261	g/m^2 (oz/yd^2)	217 (6.4)
Thickness	ASTM D 5199	mm (mils)	1.9 (75)
Roll dimension (width x length)		m (ft)	4.5 x 91 (15 x 300)
Roll area		m^2 (yd^2)	410 (500)
Estimated roll weight		kg (lb)	99 (217)

*MD - Machine Direction; **CD - Cross-machine Direction

B. Porous Asphalt Mix

1. Mix materials

~~1.~~ Mix materials consist of modified performance grade asphalt binder (PGAB), coarse and fine aggregates, and optional additives such as silicone, fibers, mineral fillers, fatty amines, and hydrated lime. Materials shall meet the requirements of the NAPA's Design, Construction, and Maintenance of Open-Graded Friction Courses, Information Series 115 (2002), except where noted otherwise below or approved in writing by the Engineer.

2. Polymer Modified PGAB~~.~~ and Mix Designs.

The asphalt binder shall be a polymer and/or fiber modified Performance Graded asphalt binder (PGAB) used in the production of Superpave Hot Mix Asphalt (HMA) mixtures. ~~In general,~~ Ideally for maximum durability, the PGAB shall be two grades stiffer than that required for dense mix asphalt (DMA) parking lot installations, which is often achieved by adding a polymer~~. The polymer modified binder for this project shall be a PG 76-22 SBS or a PG 76-22 SBR (i.e. the PGAB binder may be a 64-28 that is modified with either SBS or SBR to meet the~~

Formatted: Default Paragraph Font

Formatted: Heading 3,3SWManual, Indent: Hanging: 0.25", Space After: 3 pt, Numbered + Level: 1 + Numbering Style: A, B, C, … + Start at: 1 + Alignment: Left + Aligned at: 0.13" + Tab after: 0.5" + Indent at: 0.5", No widow/orphan control, Don't adjust space between Latin and Asian text, Don't adjust space between Asian text and numbers

Formatted: Font: Bold

Formatted: Default Paragraph Font, Font: Not Bold, No underline

Formatted: Normal,Normal-swmanual, Indent: Left: 0.5", No bullets or numbering

Formatted: Font: Not Italic

Formatted: Font: Arial

Formatted: Heading4, Indent: Left: 0.75"

Formatted: Default Paragraph Font, Font: Not Bold

Formatted Table

Formatted: Font: 10 pt

~~PG 76-22 specification).~~ and/or fiber. Mix designs will meet or exceed criteria listed in Table F-10.

The PGAB polymer modifiers are to be either styrene butadiene rubber (SBR) or styrene butadiene styrene (SBS). SBS is typically reserved for large projects as terminal pre-blending is required. SBR is feasible for smaller projects as it can be blended at the plant or terminal blended. The quantity of rubber solids in the SBR shall typically be 1.5-3% by weight of the bitumen content of the mix.

~~2.~~ The dosage of fiber additives shall be either 0.3 percent cellulose fibers or 0.4 percent mineral fibers by total mixture mass. Fibers are a simple addition either manually for a batch plant or automated for larger drum plants. The binder shall meet the requirements of AASHTO M320.

The PGAB may be pre-blended or post-blended. The pre-blended binder can be pre-blended at the source or at a terminal. For post-blended addition, the modifier can either be in-line blended or injected into the pugmill at the ~~Plant. Based on the selected method, the following must be met:~~plant.

~~Pre-Blended PG 76-22~~
The following asphalt mix designs are recommended:

a. PG 64-28 with 5 pounds of fibers per ton of asphalt mix. This mix is recommended for smaller projects with lower traffic counts or loading potential. This mix is manageable at common batch plants.

b. Pre-Blended PG 64-28 SBS with 5 pounds of fibers per ton of asphalt mix. This mix is recommended for large projects > 1acre where high durability pavements are needed. The SBS will be supplied by an approved PGAB supplier holding a Quality Control Plan approved by the ~~state DOT~~RIDOT. A Bill of Lading (BOL) will be delivered with each transport of PG 64-28 SBS. A copy of the BOL will be furnished to the QA inspector at the Plant.

c. Post-Blended PG 64-28 SBR with 5 pounds of fibers per ton of asphalt mix. This mix is recommended for projects where high durability pavements are needed. The SBR will be supplied by a HMA plant approved to perform in-line blending or blending by injection into the pugmill. A Post-Blended SBR Binder Quality Control Plan (Table F-9) will be submitted to the Engineer for approval at least 10 working days prior to production.

~~a.~~d. Pre-Blended PG 76-22 modified with SBS and 5 pounds of fibers per ton of asphalt mix. This mix is recommended for large sites anticipating high wheel load (H-20) and traffic counts for maximum durability. The SBS will be supplied by an approved PGAB supplier holding a Quality Control Plan approved by the RIDOT. A Bill of Lading (BOL) will be delivered with each transport of PG 76-22 SBS. A copy of the BOL will be furnished to the QA

Formatted: Indent: Left: 0.5", No bullets or numbering, Widow/Orphan control, Adjust space between Latin and Asian text, Adjust space between Asian text and numbers, Tab stops: Not at -0.75" + -0.5" + 0" + 0.5" + 0.75" + 1.5" + 2" + 3.5"

Formatted: Font: Not Bold

Formatted: Default Paragraph Font, Font: Not Bold, No underline

Formatted: Font: Arial

Formatted: List Paragraph, Indent: Left: 0.5", Numbered + Level: 1 + Numbering Style: a, b, c, … + Start at: 1 + Alignment: Left + Aligned at: 0.25" + Indent at: 0.5", Adjust space between Latin and Asian text, Adjust space between Asian text and numbers, Tab stops: Not at -0.75" + -0.5" + 0" + 1.5" + 2" + 3.5"

Formatted: Font: Arial

Formatted: Font: Arial

Formatted Table

Formatted: Font: 10 pt

inspector at the Plant.

~~b.~~e. Post-Blended PG 76-22 modified with SBR and 5 pounds of fibers per ton of asphalt mix. This mix is recommended for large sites anticipating high wheel load (H-20) and traffic counts for maximum durability. The SBR will be supplied by a HMA plant approved to perform in-line blending or blending by injection into the pugmill. A Post-Blended SBR Binder Quality Control Plan (Table F-9) will be submitted to the Engineer for approval at least 10 working days prior to production.

~~c. Fibers may be added per manufacturer and NAPA IS 115 recommendation if the draindown requirement cannot be met (<0.3% via ASTM D6390) provided that the air void content requirement is met (>18%, or >16% as tested with CoreLok device).~~

~~d.~~f. Quality control plans may be altered at the discretion of the Engineer and based on feasible testing as suggested by the asphalt producer. Certain QC testing requirements during production may not be feasible for small projects in which limited asphalt is generated. Some testing methods cannot be completed during the time needed during small batch (less than approximately 50 tons of porous asphalt mix) production. The feasibility should be assessed with the Engineer and producer.

3. Anti-Stripping Mix Additives.

The mix shall be tested for moisture susceptibility and asphalt stripping from the aggregate by AASHTO T283. If the retained tensile strength (TSR) < 80% upon testing, a heat stable additive shall be furnished to improve the anti-stripping properties of the asphalt binder. Test with one freeze-thaw cycle (rather than five recommended in NAPA IS 115). The amount and type of additive (e.g. fatty amines or hydrated lime) to be used shall be based on the manufacturer's recommendations, the mix design test results, and shall be approved by the Engineer. Silicone shall be added to the binder at the rate of 1.5 mL/m3 (1 oz. per 5000 gal). Fibers may be added per manufacturer and NAPA IS 115 recommendation if the draindown requirement cannot be met (<0.3% via ASTM D6390) provided that the air void content requirement is met (>18%, or >16% as tested with CoreLok device). Additives should be added per the relevant DOT specification and NAPA IS 115.

Formatted: Font: Arial, No underline
Formatted: No underline
Formatted: Default Paragraph Font, Font: Not Bold
Formatted: Default Paragraph Font, Font: Not Bold, No underline
Formatted: Font: Arial
Formatted: Font: Arial
Formatted: Font: Not Italic
Formatted: Default Paragraph Font, Font: Not Bold
Formatted: List Paragraph, Indent: Left: 0.5", Numbered + Level: 1 + Numbering Style: a, b, c, … + Start at: 1 + Alignment: Left + Aligned at: 0.25" + Indent at: 0.5", Adjust space between Latin and Asian text, Adjust space between Asian text and numbers, Tab stops: Not at -0.75" + -0.5" + 0" + 1.5" + 2" + 3.5"
Formatted: Font: Arial, No underline
Formatted: Font: Arial
Formatted: Font: Arial
Formatted: Font: Arial
Formatted: Font: Arial
Formatted: Font: Arial
Formatted: Font: 8 pt
Formatted: List Paragraph, Tab stops: Not at -0.75" + -0.5" + 0" + 1.5" + 2" + 3.5"
Formatted: Default Paragraph Font, Font: Not Bold
Formatted: Heading4, Indent: Left: 0.5", Hanging: 0.25", Numbered + Level: 1 + Numbering Style: 1, 2, 3, … + Start at: 1 + Alignment: Left + Aligned at: 0.5" + Tab after: 0.19" + Indent at: 1"
Formatted: Normal,Normal-swmanual, Indent: Left: 0.5"
Formatted: Font: Not Italic
Formatted: Not Superscript/ Subscript
Formatted: Not Superscript/ Subscript, Not Raised by / Lowered by
Formatted: Font: Not Italic
Formatted: Font: Not Italic
Formatted: Font: Arial, 8 pt
Formatted: Default, Indent: Left: 0.75", First line: 0"
Formatted Table
Formatted: Font: 10 pt

~~Table F-9 Post-Blended SBR Binder QC Plan requirements.~~

The QC Plan will contain:
1. Company name and address 2. Plant location and address 3. Type of Facility 4. Contact information for the Quality Control Plan Administrator 5. QC Tests to be performed on each PGAB 6. Name(s) of QC Testing Lab to perform QC and Process Control testing. 7. Actions to be taken for PG Binders and SBR in Non compliance 8. List of mechanical controls (requirements below) 9. List of process controls and documentation (requirements below)
List of Mechanical Controls
1. Liquid SBR no-flow alert system with an "alert" located in the control room and automatic documentation of a no flow situation on the printout 2. Provide means of calibrating the liquid SBR metering system to a delivery tolerance of 1%. 3. A batching tolerance at the end of each day's production must be within 0.5% of the amount of SBR solids specified. 4. Mag-flow meter (other metering system may be considered) 5. Method of sampling liquid SBR
List of Process Controls and Documentation
~~1. Printouts of liquid SBR and PG binder quantities must be synchronized within~~ one minute of each other 2. SBR supplier certification showing the percent of SBR solids in liquid SBR 3. Test results of a lab sample blended with the specified dosage of SBR. At a minimum, provide the name of the PGAB and liquid SBR suppliers, and PGAB information such as grade and lot number, and SBR product name used for the sample. 4. MSDS sheet for liquid SBR 5. Handling, storage, and usage requirements will be followed as required by the liquid SBR manufacturer 6. At a minimum, provide a table showing proposed rate of SBR liquid (L/min.) in relation to HMA production rate (tons per hour, TPH) for the % solids in liquid SBR, quantity of SBR specified for HMA production, and the specific gravity of the SBR. 7. QCT or QC Plan Administrator must be responsible for documenting quantities, ensuring actual use is within tolerance, etc. All printouts, calculations, supplier certifications etc. must be filed and retained as part of the QCTs daily diary/reports. 8. Method and Frequency of testing at the HMA plant, including initial testing and specification testing.

*This Plan shall be submitted to the Engineer 10 days before production.

4. Coarse Aggregate.

Formatted: Default Paragraph Font, Font: Not Bold

Formatted: Font: Arial

Formatted Table

Formatted: Font: 10 pt

4. Coarse aggregate shall be that part of the aggregate retained on the No. 8 sieve; it shall consist of clean, tough, durable fragments of crushed stone, or crushed gravel of uniform quality throughout.

Coarse aggregate shall be crushed stone or crushed gravel and shall have a percentage of wear as determined by AASHTO T96 of not more than 40 percent. In the mixture, at least 75 percent, by mass (weight), of the material coarser than the 4.75 mm (No. 4) sieve shall have at least two fractured faces, and 90 percent shall have one or more fractured faces (ASTM D5821). Coarse aggregate shall be free from clay balls, organic matter, deleterious substances, and a not more than 8.0% of flat or elongated pieces (>3:1) as specified in ASTM D4791.

5. Fine Aggregate.

5. The fine aggregate shall be that part of the aggregate mixture passing the No. 8 sieve and shall consist of sand, screenings, or combination thereof with uniform quality throughout. Fine aggregate shall consist of durable particles, free from injurious foreign matter. Screenings shall be of the same or similar materials as specified for coarse aggregate. The plasticity index of that part of the fine aggregate passing the No. 40 sieve shall be not more than 6 when tested in accordance with AASHTO T90. Fine aggregate from the total mixture shall meet plasticity requirements.

Table F-9 Post-Blended SBR Binder QC Plan Requirements

Formatted: Indent: Left: 0.5"

Formatted: Default Paragraph Font, Font: Not Bold

Formatted: Font: Arial

Formatted: Indent: Left: 0.5", No bullets or numbering

Formatted: Font: Arial, Bold

Formatted: List Paragraph, Indent: Left: 0"

Formatted Table

Formatted: Font: 10 pt

The QC Plan will contain: 1. Company name and address 2. Plant location and address 3. Type of Facility 4. Contact information for the Quality Control Plan Administrator 5. QC Tests to be performed on each PGAB 6. Name(s) of QC Testing Lab to perform QC and Process Control testing. 7. Actions to be taken for PG Binders and SBR in Non compliance 8. List of mechanical controls (requirements below) 9. List of process controls and documentation (requirements below)
List of Mechanical Controls 1. Liquid SBR no-flow alert system with an "alert" located in the control room and automatic documentation of a no flow situation on the printout 2. Provide means of calibrating the liquid SBR metering system to a delivery tolerance of 1%. 3. A batching tolerance at the end of each day's production must be within 0.5% of the amount of SBR solids specified. 4. Mag-flow meter (other metering system may be considered) 5. Method of sampling liquid SBR
List of Process Controls and Documentation 1. Printouts of liquid SBR and PG binder quantities must be synchronized within one minute of each other 2. SBR supplier certification showing the percent of SBR solids in liquid SBR 3. Test results of a lab sample blended with the specified dosage of SBR. At a minimum, provide the name of the PGAB and liquid SBR suppliers, and PGAB information such as grade and lot number, and SBR product name used for the sample. 4. MSDS sheet for liquid SBR 5. Handling, storage, and usage requirements will be followed as required by the liquid SBR manufacturer 6. At a minimum, provide a table showing proposed rate of SBR liquid (L/min.) in relation to HMA production rate (tons per hour, TPH) for the % solids in liquid SBR, quantity of SBR specified for HMA production, and the specific gravity of the SBR. 7. QCT or QC Plan Administrator must be responsible for documenting quantities, ensuring actual use is within tolerance, etc. All printouts, calculations, supplier certifications etc. must be filed and retained as part of the QCTs daily diary/reports. 8. Method and Frequency of testing at the HMA plant, including initial testing and specification testing.
*This Plan shall be submitted to the Engineer 10 days before production.

6. Porous Asphalt Mix Design~~.~~ Criteria.

~~6.~~ The Contractor shall submit a mix design at least 10 working days prior to the beginning of production. The Contractor shall make available samples of coarse aggregate, fine aggregate, mineral filler, fibers and a sample of the PGAB that will be used in the design of the mixture. A certificate of analysis (COA) of

Formatted: Default Paragraph Font, Font: Not Bold

Formatted: Normal,Normal-swmanual, Indent: Left: 0.5", No bullets or numbering

Formatted Table

Formatted: Font: 10 pt

the PGAB will be submitted with the mix design. The COA will be certified by a laboratory meeting the requirements of AASHTO R18. The Laboratory will be certified by the ~~state DOT~~RIDOT, regional equivalent (e.g. NETTCP), and/or qualified under ASTM D3666. Technicians will be certified by the regional certification agency (e.g. NETTCP) in the discipline of HMA Plant Technician.

~~The mixture will be designed according to the NAPA *IS 131*, with the exception of testing for air void content.~~ Bulk specific gravity (SG) used in air void content calculations shall not be determined and results will not be accepted using AASHTO T166 (saturated surface dry), since it is not intended for open graded specimens (>10% AV). Bulk SG shall be calculated using AASHTO T275 (paraffin wax) or ASTM D6752 (automatic vacuum sealing, e.g. CoreLok). Air void content shall be calculated from the bulk SG and maximum theoretical SG (AASHTO T209) using ASTM D3203.

The materials shall be combined and graded to meet the composition limits by mass (weight) as shown in ~~Table~~ Table F-10.

Table F-10 Porous ~~asphalt mix design criteria~~Asphalt Mix Design Criteria.

Sieve Size (inch/mm)	Percent Passing (%)
0.75/19	100
0.50/12.5	85-100
0.375/9.5	55-75
No.4/4.75	10-25
No.8/2.36	5-10
No.200/0.075 (#200)	2-4
Binder Content (AASHTO T164)	6.0-6.5%
Air Void Content by Corelok (ASTM D6752)*	16.0-20.0%
Air Void Content by Paraffin wax (AASHTO T275)*	18.0-22.0%
Draindown (ASTM D6390)**	<= 0.3 %
Retained Tensile Strength (AASHTO 283)***	>= 80 %

~~* Either method is acceptable~~

~~**~~ Sieve Size (inch/mm)	Percent Passing (%)
0.75/19	100
0.50/12.5	85-100
0.375/9.5	55-75
No.4/4.75	10-25
No.8/2.36	5-10
No.200/0.075 (#200)	2-4
Binder Content (AASHTO T164)	6 - 6.5%
Fiber Content by Total Mixture Mass	0.3% cellulose or 0.4% mineral

Formatted: Normal,Normal-swmanual

Formatted: Normal,Normal-swmanual, Indent: Left: 0.5"

Formatted: Font: Arial

Formatted: Normal,Normal-swmanual, Indent: Left: 0", First line: 0"

Formatted: Font: 12 pt

Formatted: Caption, Don't keep with next, Don't keep lines together

Formatted: Font: 12 pt

Formatted Table

Formatted: Font: 10 pt

** **Sieve Size (inch/mm)**	**Percent Passing (%)**
Rubber Solids (SBR) Content by Weight of the Bitumen	1.5-3% or TBD
Air Void Content (ASTM D6752/AASHTO T275)	16.0-22.0%
Draindown (ASTM D6390)*	< 0.3 %
Retained Tensile Strength (AASHTO 283)**	> 80 %
Cantabro abrasion test on unaged samples (ASTM D7064-04)	< 20%
Cantabro abrasion test on 7 day aged samples	< 30%

*Cellulose or mineral fibers may be used to reduce draindown.

*****If the TSR (retained tensile strength) values fall below 80% when tested per NAPA IS 131 (with a single freeze thaw cycle rather than 5~~).~~), then in Step 4, the contractor shall employ an antistrip additive, such as hydrated lime (ASTM C977) or a fatty amine, to raise the TSR value above 80%.

~~7.~~C. Porous Asphalt Mix Production

1. Mixing Plants.

~~a.~~ Mixing plants shall meet the requirements of hot mix asphalt plants as specified in the ~~state DOT~~RIDOT or regional equivalent unless otherwise approved by the Engineer~~ (e.g. *Section 401- Plant Mix Pavements – General for Quality Assurance specifications* in the *Standard Specifications for Road and Bridge Construction* – State of New Hampshire DOT, 2006).~~.

2. Preparation of Asphalt Binder.

~~b.~~ The asphalt material shall be heated to the temperature specified in the ~~state DOT~~RIDOT specification Part 400 (if using a DOT spec for the mix) in a manner that will avoid local overheating. A continuous supply of asphalt material shall be furnished to the mixer at a uniform temperature.

3. Preparation of Aggregates.

~~c.~~ The aggregate for the mixture shall be dried and heated at the mixing plant before being placed in the mixer. Flames used for drying and heating shall be properly adjusted to avoid damaging the aggregate and depositing soot or unburned fuel on the aggregate.

4. Mineral filler~~,~~

Mineral filler if required to meet the grading requirements, shall be added in a manner approved by the Engineer after the aggregates have passed through the dryer.

5. Mixing.

The above preparation of aggregates does not apply for drum-mix plants.

Formatted: Indent: Left: 0", First line: 0"

Formatted: No underline

Formatted: Indent: Hanging: 0.25", Space Before: 12 pt, After: 3 pt, Numbered + Level: 1 + Numbering Style: A, B, C, … + Start at: 1 + Alignment: Left + Aligned at: 0.13" + Tab after: 0.5" + Indent at: 0.5"

Formatted: Font: Arial

Formatted: Indent: Left: 0.5", No bullets or numbering, Widow/Orphan control, Adjust space between Latin and Asian text, Adjust space between Asian text and numbers

Formatted: Font: Arial

Formatted: Heading4

Formatted: Indent: Left: 0.5", No bullets or numbering, Widow/Orphan control, Adjust space between Latin and Asian text, Adjust space between Asian text and numbers

Formatted: Font: Arial

Formatted: Heading4, Indent: Left: 0.75"

Formatted: Indent: Left: 0.5", No bullets or numbering, Widow/Orphan control, Adjust space between Latin and Asian text, Adjust space between Asian text and numbers

Formatted: Heading4, Indent: Left: 0.75"

Formatted: Normal,Normal-swmanual, Indent: Left: 0.5", Tab stops: 0.5", Left

Formatted: Heading4, Indent: Left: 0.75"

Formatted: Font: Times New Roman

Formatted Table

Formatted: Font: 10 pt

~~d.~~ ~~Mixing.~~ The dried aggregate shall be combined in the mixer in the amount of each fraction of aggregate required to meet the job-mix formula and thoroughly mixed prior to adding the asphalt material.

The dried aggregates shall be combined with the asphalt material in such a manner as to produce a mixture that when discharged from the pugmill is at a target temperature in the range that corresponds to an asphalt binder viscosity of 700 to 900 centistokes and within a tolerance of ± 11 °C (± 20 °F).

The asphalt material shall be measured or gauged and introduced into the mixer in the quantity determined by the Engineer for the particular material being used and at the temperature specified in the relevant specification.

After the required quantity of aggregate and asphalt material has been introduced into the mixer, the materials shall be mixed until a complete and uniform coating of the particles and a thorough distribution of the asphalt material throughout the aggregate is secured. The mixing time will be regulated by the Engineer~~, and a suitable locking means shall be provided for these regulations~~.

All plants shall have a positive means of eliminating oversized and foreign material from being incorporated into the mixer.

~~e.~~6. QC/QA During Production

The Contractor shall provide at ~~his~~Contractors' expense and the Engineer's approval a third-party QA Inspector to oversee and document mix production. All mix testing results during production should be submitted to the QA Inspector.

The QC plan may be altered at the discretion of the Engineer and based on feasible testing as suggested by the asphalt producer. Certain QC testing requirements during production may not be feasible for small projects in which limited asphalt is generated. Some testing methods cannot be completed during the time needed during small batch production. The feasibility should be assessed with the Engineer and producer.

The mixing plant shall employ a Quality Control Technician (QCT). The QCT will perform QC/QA testing and will be certified in the discipline of HMA Plant Technician by the relevant certifying agency (e.g. NETTCP in New England). The Contractor shall sample, test and evaluate the mix in accordance with the methods and minimum frequencies in ~~Table~~ Table F-11 and the Post-Blended SBR Binder Quality Control Plan (if applicable).

Formatted: Normal,Normal-swmanual, Indent: Left: 0.5", No bullets or numbering

Formatted: Normal,Normal-swmanual, Indent: Left: 0.5"

Formatted: Normal,Normal-swmanual, Indent: Left: 0.75"

Formatted: Normal,Normal-swmanual, Indent: Left: 0.5"

Formatted: Font: Arial

Formatted: Heading4, Indent: Left: 0.5", Hanging: 0.25", Numbered + Level: 1 + Numbering Style: 1, 2, 3, … + Start at: 2 + Alignment: Left + Aligned at: 0.5" + Tab after: 0.19" + Indent at: 1", Widow/Orphan control, Adjust space between Latin and Asian text, Adjust space between Asian text and numbers

Formatted: Indent: Left: 0.5"

Formatted: No underline

Formatted: Indent: Left: 0.5", Tab stops: Not at -0.75" + -0.5" + 0" + 1.5" + 2" + 3.5"

Formatted: Indent: Left: 0.5"

Formatted: No underline

Formatted: Font: Arial, Underline

Formatted Table

Formatted: Font: 10 pt

Table F-11 QC/QA testing requirements during production.

Test	Min. Frequency	Test Method
Temperature in Truck at Plant	6 times per day	
Gradation	greater of either (a) 1 per 500 tons, (b) 2 per day, or (c) 3 per job	AASHTO T30
Binder Content	greater of either (a) 1 per 500 tons, (b) 2 per day, or (c) 3 per job	AASHTO T164
Air Void Content	greater of either (a) 1 per 500 tons, (b) 2 per day, or (c) 3 per job	ASTM D6752
Binder Draindown	greater of either (a) 1 per 500 tons, (b) 1 per day, or (c) 1 per job	ASTM D6390

Test	Min. Frequency	Test Method
Temperature in Truck at Plant	6 times per day	
Gradation	greater of either (a) 1 per 500 tons, (b) 2 per day, or (c) 3 per job	AASHTO T30
Binder Content	greater of either (a) 1 per 500 tons, (b) 2 per day, or (c) 3 per job	AASHTO T164
Air Void Content	greater of either (a) 1 per 500 tons, (b) 2 per day, or (c) 3 per job	ASTM D6752
Binder Draindown	greater of either (a) 1 per 500 tons, (b) 1 per day, or (c) 1 per job	ASTM D6390

If an analyzed sample is outside the testing tolerances immediate corrective action will be taken. After the corrective action has been taken the resulting mix will be sampled and tested. If the re-sampled mix test values are outside the tolerances the Engineer will be immediately informed. The Engineer may determine that it is in the best interest of project that production is ceased. The Contractor will be responsible for all mix produced for the project.

Testing Tolerances During Production. Testing of the air void content, binder draindown, and TSR shall be within the limits set in Table F-~~10~~11. The paving mixture produced should not vary from the design criteria for aggregate gradation and binder content by more than the tolerances in Table F-12.

Table F-12 QC/QA testing tolerances during production.

Formatted: Font: Arial, Bold, Font color: Auto

Formatted: Font: Arial, Bold, Font color: Auto

Formatted: Default, Indent: First line: 1", Don't keep lines together

Formatted: Indent: Left: 0.5"

Formatted: No underline

Formatted: Indent: Left: 0.5", Tab stops: Not at 1"

Formatted: Indent: Left: 0"

Formatted: Font: 12 pt

Formatted: Caption, Indent: First line: 0.5"

Formatted: Font: 12 pt

Formatted Table

Formatted: Font: 10 pt

Sieve Size (inch/mm)	Percent Passing
0.75/19	-
0.50/12.5	±6.0
0.375/9.5	±6.0
No.4/4.75	±5.0
No.8/2.36	±4.0
No.200/0.075 (#200)	±2.0
%PGAB	+0.4, -0.2

Sieve Size (inch/mm)	Percent Passing
0.75/19	-
0.50/12.5	±6.0
0.375/9.5	±6.0
No.4/4.75	±5.0
No.8/2.36	±4.0
No.200/0.075 (#200)	±2.0
%PGAB	+0.4, -0.2

Should the paving mixture produced vary from the designated grading and asphalt content by more than the above tolerances, ~~proper changes~~the appropriate production modifications are to be made until ~~it~~the porous asphalt mix is within these tolerances.

Samples of the mixture, when tested in accordance with AASHTO T164 and T30, shall not vary from the grading proportions of the aggregate and binder content designated by the Engineer by more than the respective tolerances specified above and shall be within the limits specified for the design gradation.

7. Plant Shutdown and Rejection of Mix.

Should the porous asphalt mix not meet the tolerances specified ~~above~~in this section upon repeat testing, the Engineer may reject further loads of mix. Mix that is loaded into trucks during the time that the plant is changing operations to comply with a failed test shall not be accepted, and should be recycled at the plant.

8. Striping Paint ~~shall be latex, water-base emulsion, ready-mixed, complying with PS TT-P-1952.~~

Striping paint shall be latex, water-base emulsion, ready-mixed, and complying with pavement marking specifications PS TT-P-1952.

PART 3 EXECUTION

3.1 INSTALLATION

Formatted: Indent: Left: 0.5", Tab stops: Not at 0.38" + 1"

Formatted: Indent: Left: 0.5", Tab stops: Not at 1" + 1.25"

Formatted: Indent: Left: 0.5", Tab stops: Not at 0.38" + 1"

Formatted: Font: Arial

Formatted: Indent: Left: 0.5"

Formatted: Font: Arial

Formatted: Heading4, Indent: Left: 0.5", Hanging: 0.25", Numbered + Level: 1 + Numbering Style: 1, 2, 3, … + Start at: 2 + Alignment: Left + Aligned at: 0.5" + Tab after: 0.19" + Indent at: 1", Widow/Orphan control, Adjust space between Latin and Asian text, Adjust space between Asian text and numbers

Formatted: Font: Arial

Formatted: Font: Bold

Formatted: Keep with next, Keep lines together

Formatted: Font: Arial, Bold

Formatted: Heading 2,Heading 2-swManual, Keep lines together

Formatted: Font: Arial, Bold, Italic

Formatted Table

Formatted: Font: 10 pt

A. Porous Media Beds

Protection of native materials from over compaction is important. Proper compaction of select subbase materials is essential. Improper compaction of subbase materials will result in either 1) low pavement durability from insufficient compaction, or 2) poor infiltration due to over-compaction of subbase. Care must be taken to assure proper compaction as detailed below.

1. Grade Control

   a. a. Establish and maintain required lines and elevations. The Engineer shall be notified for review and approval of final stake lines for the work before construction work is to begin. Finished surfaces shall be true to grade and even, free of roller marks and free of puddle-forming low spots to form puddles. All areas must drain. freely. Excavation elevations should be within +/- 0.1 ft (+/- 3 cm).

   b.

   b. If, in the opinion of the Engineer, based upon reports of the testing service and inspection, the quality of the work is below the standards which have been specified, additional work and testing will be required until satisfactory results are obtained.

   2.c. The Engineer shall be notified at least 24 hours prior to all porous media bed and porous pavement work.

3.2. Subgrade pPreparation

   a. a. Existing subgrade underNative subgrade refers to materials beyond the limit of the excavation. The existing native subgrade material under all bed areas shall NOT be compacted or subject to excessive construction equipment traffic prior to geotextile and stone bed placement. Compaction is acceptable if an impermeable liner is used at the base of the porous asphalt system and infiltration is not desired.

   b. b. Where erosion of the native material subgrade has caused accumulation of fine materials and/or surface ponding, this material shall be removed with light equipment and the underlying soils scarified to a minimum depth of 6 inches with a York rake or equivalent and light tractor.

   c. c. Bring subgrade of stone porous media bed to line, grade, and elevations indicated. Fill and lightly regrade any areas damaged by erosion, ponding, or traffic compaction before the placing of the stone. All bed bottoms are level grade. subbase.

   d. All bed bottoms are as level as feasible to promote uniform infiltration. For pavements subbases constructed on grade, soil or fabric barriers should be constructed along equal elevation for every 6-12" of grade change to

Formatted: Font: Arial

Formatted: Heading 3,3SWManual, Tab stops: 0.25", Left

Formatted: Default Paragraph Font, Font: Not Bold

Formatted: Heading4, Indent: Left: 0.5", Hanging: 0.25", Numbered + Level: 1 + Numbering Style: 1, 2, 3, … + Start at: 1 + Alignment: Left + Aligned at: 0.5" + Tab after: 0.19" + Indent at: 1", Widow/Orphan control

Formatted: List Paragraph, Indent: Left: 0.75", Numbered + Level: 1 + Numbering Style: a, b, c, … + Start at: 1 + Alignment: Left + Aligned at: 0.25" + Indent at: 0.5"

Formatted: List Paragraph, Indent: Left: 0.75", Numbered + Level: 1 + Numbering Style: a, b, c, … + Start at: 1 + Alignment: Left + Aligned at: 0.25" + Indent at: 0.5"

Formatted: Normal,Normal-swmanual, Indent: Left: 0.5", First line: 0"

Formatted: List Paragraph, Indent: Left: 0.75", Numbered + Level: 1 + Numbering Style: a, b, c, … + Start at: 1 + Alignment: Left + Aligned at: 0.25" + Indent at: 0.5", Widow/Orphan control

Formatted: Default Paragraph Font, Font: Not Bold

Formatted: Heading4, Indent: Left: 0.5", Hanging: 0.25", Numbered + Level: 1 + Numbering Style: 1, 2, 3, … + Start at: 2 + Alignment: Left + Aligned at: 0.5" + Tab after: 0.19" + Indent at: 1", Widow/Orphan control

Formatted: Default Paragraph Font, Font: Not Bold

Formatted: Normal,Normal-swmanual

Formatted: List Paragraph, Indent: Left: 0.75", Numbered + Level: 1 + Numbering Style: a, b, c, … + Start at: 1 + Alignment: Left + Aligned at: 0.25" + Indent at: 0.5"

Formatted: Normal,Normal-swmanual, Indent: Left: 0.5", First line: 0"

Formatted: List Paragraph, Indent: Left: 0.75", Numbered + Level: 1 + Numbering Style: a, b, c, … + Start at: 1 + Alignment: Left + Aligned at: 0.25" + Indent at: 0.5"

Formatted: Normal,Normal-swmanual, Indent: Left: 0.5", First line: 0"

Formatted: List Paragraph, Indent: Left: 0.75", Numbered + Level: 1 + Numbering Style: a, b, c, … + Start at: 1 + Alignment: Left + Aligned at: 0.25" + Indent at: 0.5"

Formatted Table

Formatted: Font: 10 pt

act as internal check dams. This will prevent erosion within the subbase on slope.

~~4.~~3. Porous Media Bed Installation

a. ~~a.~~ Subbase refers to materials below pavement surface and above native subgrade. Upon completion of subgrade work, the Engineer shall be notified and shall inspect at his/her discretion before proceeding with the porous media bed installation.

b. ~~b. Geotextile~~Sideslope geotextile and porous media bed aggregate shall be placed immediately after approval of subgrade preparation. Any accumulation of debris or sediment which has taken place after approval of subgrade shall be removed prior to installation of geotextile at no extra cost to the Owner.

c. ~~c.~~ Place sideslope geotextile in accordance with manufacturer's standards and recommendations. Adjacent strips of geotextile shall overlap a minimum of sixteen inches (16"). Secure geotextile at least four feet (~~4'~~1.2 m) outside of the bed excavation and take any steps necessary to prevent any runoff or sediment from entering the storage bed.

d. ~~d.~~ Install ~~coarse~~ filter course aggregate in 8-inch maximum lifts~~. Lightly compact each layer with equipment, keeping equipment movement over storage bed subgrades~~ to a ~~minimum.~~MAXIMUM of 95% standard proctor compaction (ASTM D698 / AASHTO T99). Install aggregate to grades indicated on the drawings.

e. ~~e.~~ Install choker, gravel, and stone base course ~~(see Materials section)~~ aggregate to a MAXIMUM of 95% compaction standard proctor (ASTM D698 / AASHTO T99). Choker should be placed evenly over surface of ~~stone~~filter course bed, sufficient to allow placement of pavement, and notify Engineer for approval. Choker base course thickness shall be sufficient to allow for even placement of the porous asphalt but no less than ~~1-inch~~4-inches (10 cm) in depth.

f. ~~f.~~ The density of subbase courses shall be determined by AASHTO T 191 (Sand-Cone Method), AASHTO T 204 (Drive Cylinder Method), or AASHTO T 238 (Nuclear Methods), or other approved methods at the discretion of the supervising engineer.

g. The infiltration rate of the compacted subbase shall be determined by ASTM D3385 or approved alternate at the discretion of the supervising engineer. The infiltration rate shall be no less 5-30 ft/day or 50% of the hydraulic conductivity (D2434) at 95% standard proctor compaction (refer to section 2.1.A.5).

Formatted: Normal,Normal-swmanual

Formatted: Default Paragraph Font, Font: Not Bold

Formatted: Heading4, Indent: Left: 0.5", Hanging: 0.25", Numbered + Level: 1 + Numbering Style: 1, 2, 3, … + Start at: 2 + Alignment: Left + Aligned at: 0.5" + Tab after: 0.19" + Indent at: 1"

Formatted: Normal,Normal-swmanual

Formatted: List Paragraph, Indent: Left: 0.75", Numbered + Level: 1 + Numbering Style: a, b, c, … + Start at: 1 + Alignment: Left + Aligned at: 0.25" + Indent at: 0.5"

Formatted: Normal,Normal-swmanual, Indent: Left: 0.5", First line: 0"

Formatted: List Paragraph, Indent: Left: 0.75", Numbered + Level: 1 + Numbering Style: a, b, c, … + Start at: 1 + Alignment: Left + Aligned at: 0.25" + Indent at: 0.5"

Formatted: Normal,Normal-swmanual, Indent: Left: 0.5", First line: 0"

Formatted: List Paragraph, Indent: Left: 0.75", Numbered + Level: 1 + Numbering Style: a, b, c, … + Start at: 1 + Alignment: Left + Aligned at: 0.25" + Indent at: 0.5"

Formatted: Normal,Normal-swmanual, Indent: Left: 0.5", First line: 0"

Formatted: List Paragraph, Indent: Left: 0.75", Numbered + Level: 1 + Numbering Style: a, b, c, … + Start at: 1 + Alignment: Left + Aligned at: 0.25" + Indent at: 0.5"

Formatted: Normal,Normal-swmanual, Indent: Left: 0.5", First line: 0"

Formatted: List Paragraph, Indent: Left: 0.75", Numbered + Level: 1 + Numbering Style: a, b, c, … + Start at: 1 + Alignment: Left + Aligned at: 0.25" + Indent at: 0.5"

Formatted: Normal,Normal-swmanual, Indent: Left: 0.5", First line: 0"

Formatted Table

Formatted: Font: 10 pt

h. Compaction of subbase course material shall be done with a method and adequate water to meet the requirements. Rolling and shaping shall continue until the required density is attained. Water shall be uniformly applied over the subbase course materials during compaction in the amount necessary for proper consolidation.

i. Rolling and shaping patterns shall begin on the lower side and progress to the higher side of the subbase course while lapping the roller passes parallel to the centerline. Rolling and shaping shall continue until each layer conforms to the required grade and cross-section and the surface is smooth and uniform.

j. Following placement of ~~bed~~subbase aggregate, the sideslope geotextile shall be folded back along all bed edges to protect from sediment washout along bed edges. At least a four-foot edge strip shall be used to protect beds from adjacent bare soil. This edge strip shall remain in place until all bare soils contiguous to beds are stabilized and vegetated. In addition, take any other necessary steps to prevent sediment from washing into beds during site development. When the site is fully stabilized, temporary sediment control devices shall be removed.

~~5.~~4. QC/QA requirements for Porous Media Bed Construction.

QC/QA activities are summarized in Table F-13.

~~**Table F-13 QC/QA requirements for porous media bed construction.**~~

Activity	Schedule
Contractor to notify Engineer for approval	24 hours in advance of start of work
Contractor to employ soil inspector acceptable to Engineer	NA
Contractor to employ staking and layout control inspector acceptable to Engineer	NA
~~Contractor to employ site grading~~ inspector acceptable to Engineer	NA
Contractor to employ pavement work inspector acceptable to Engineer	NA
Contractor to notify Engineer for approval	after subgrade preparation, before construction of porous media bed
Contractor to notify Engineer for approval	after choker course placed, before placement of pavement

Formatted: List Paragraph, Indent: Left: 0.75", Numbered + Level: 1 + Numbering Style: a, b, c, … + Start at: 1 + Alignment: Left + Aligned at: 0.25" + Indent at: 0.5"

Formatted: Font: Arial, Not Bold, No underline

Formatted: List Paragraph, Indent: Left: 0", Widow/Orphan control, Adjust space between Latin and Asian text, Adjust space between Asian text and numbers

Formatted: Font: Not Bold

Formatted: Heading4, Indent: Left: 0.5", Hanging: 0.31", Numbered + Level: 1 + Numbering Style: 1, 2, 3, … + Start at: 2 + Alignment: Left + Aligned at: 0.5" + Tab after: 0.19" + Indent at: 1", Widow/Orphan control, Adjust space between Latin and Asian text, Adjust space between Asian text and numbers

Formatted: Indent: First line: 0.31", Space After: 10.25 pt, Line spacing: At least 12.8 pt

Formatted Table

Formatted: Font: 10 pt

B. ~~B.~~ Porous Asphalt Pavement Installation

1. ~~1.~~ Mixing Plant

The mixing plant, hauling and placing equipment, and construction methods shall be in conformance with NAPA IS 131 and applicable sections of the ~~state DOT's~~RIDOT's specification for asphalt mixes. The use of surge bins shall not be permitted.

~~2. The use of surge bins shall not be permitted.~~

~~3.~~ **Table F-13 QC/QA requirements for porous media bed construction.**

Activity	Schedule
Contractor to notify Engineer for approval	24 hours in advance of start of work
Contractor to employ soil inspector acceptable to Engineer	NA
Contractor to employ staking and layout control inspector acceptable to Engineer	NA
Contractor to employ site grading inspector acceptable to Engineer	NA
Contractor to employ pavement work inspector acceptable to Engineer	NA
Contractor to notify Engineer for approval	after subgrade preparation, before construction of porous media bed
Contractor to notify Engineer for approval	after choker course placed, before placement of pavement

2. Hauling Equipment. ~~Trucks used for hauling asphalt mixture shall have~~ The open graded mix shall be transported in clean vehicles with tight, ~~clean,~~ smooth ~~metal bodies. The Contractor shall apply a thin coat of~~ dump beds that have been sprayed with a non-petroleum ~~based~~release agent or soap solution to prevent the mixture from adhering to the ~~bodies.~~

~~Each~~dump bodies. Mineral filler, fine aggregate, slag dust, etc. shall not be used to dust truck ~~shall have a cover of canvas or other~~beds. The open graded mix shall be covered during transportation with a suitable material of such size sufficient to protect the mix~~ture~~ from the weather~~.~~ and also minimize mix cooling and the prevention of lumps. When necessary, to ensure the delivery of material at the specified temperature, truck bodies shall be insulated, and covers shall be securely fastened. Long hauls, particularly those in excess of 25 miles (40 km), may result in separation of the mix and its rejection.

3. ~~4.~~ Placing Equipment.

The paver shall be a self-propelled unit with an activated screed or strike-off assembly, capable of being heated if necessary, and capable of spreading and

Formatted: Default Paragraph Font

Formatted: Heading 3,3SWManual, Indent: Hanging: 0.5", Numbered + Level: 1 + Numbering Style: A, B, C, … + Start at: 1 + Alignment: Left + Aligned at: 0.13" + Tab after: 0.5" + Indent at: 0.5", Tab stops: 0.25", List tab + Not at 0.5"

Formatted: Font: Bold

Formatted: Normal,Normal-swmanual, Indent: Left: 0.5", First line: 0"

Formatted: Font: 10 pt, Bold

Formatted: Indent: Left: 0", First line: 1", Keep with next

Formatted: Font: Garamond, Font color: Black

Formatted: Font: Garamond, Font color: Black

Formatted: Font: Garamond, Font color: Black

Formatted: Font: Garamond, Font color: Black

Formatted: Normal,Normal-swmanual, Indent: Left: 0.5", First line: 0"

Formatted: Normal,Normal-swmanual, Indent: Left: 0", First line: 0"

Formatted: Normal,Normal-swmanual, Indent: Left: 0.5", First line: 0", No widow/orphan control

Formatted Table

Formatted: Font: 10 pt

finishing the mixture without segregation for the widths and thicknesses required. In general, track pavers have proved superior for Porous Asphalt placement. The screed shall be adjustable to provide the desired cross-sectional shape. The finished surface shall be of uniform texture and evenness and shall not show any indication of tearing, shoving, or pulling of the mixture. The machine shall, at all times, be in good mechanical condition and shall be operated by competent personnel.

Pavers shall be equipped with the necessary attachments, designed to operate electronically, for controlling the grade of the finished surface.

The adjustments and attachments of the paver will be checked and approved by the Engineer before placement of asphalt material.

Pavers shall be equipped with a sloped plate to produce a tapered edge at longitudinal joints. The sloped plate shall be attached to the paver screed extension.

The sloped plate shall produce a tapered edge having a face slope of 1:3 (vertical: horizontal). The plate shall be so constructed as to accommodate compacted mat thickness from 35 to 100 mm (1 1/4 to 4 inches). The bottom of the sloped plate shall be mounted 10 to 15 mm (3/8 to 1/2 inch) above the existing pavement. The plate shall be interchangeable on either side of the screed.

Pavers shall also be equipped with a joint heater capable of heating the longitudinal edge of the previously placed mat to a surface temperature of 95 °C (200 °F), or higher if necessary, to achieve bonding of the newly placed mat with the previously placed mat. This shall be done without undue breaking or fracturing of aggregate at the interface. The surface temperature shall be measured immediately behind the joint heater. The joint heater shall be equipped with automated controls that shut off the burners when the pavement machine stops and reignite them with the forward movement of the paver. The joint heater shall heat the entire area of the previously placed wedge to the required temperature. Heating shall immediately precede placement of the asphalt material.

4. ~~5.~~ Rollers.

Rollers shall be in good mechanical condition, operated by competent personnel, capable of reversing without backlash, and operated at speeds slow enough to avoid displacement of the asphalt mixture. The mass (weight) of the rollers shall be sufficient to compact the mixture to the required density without crushing of the aggregate. Rollers shall be equipped with tanks and sprinkling bars for wetting the rolls.

Formatted: Normal,Normal-swmanual, Indent: Left: 0.5", First line: 0"

Formatted: Normal,Normal-swmanual, Indent: Left: 0", First line: 0"

Formatted: Normal,Normal-swmanual, Indent: Left: 0.5", First line: 0"

Formatted Table

Formatted: Font: 10 pt

Rollers shall be two-axle tandem rollers with a gross mass (weight) of not less than 7 metric tons (8 tons) and not more than 10 metric tons (12 tons) and shall be capable of providing a minimum compactive effort of 44 kN/m (250 pounds per inch) of width of the drive roll. All rolls shall be at least 1 m (42 inches) in diameter.

A rubber tired roller will not be required on the open graded asphalt friction course surface.

5. ~~6.~~ Conditioning of Existing Surface.
Contact surfaces such as curbing, gutters, and manholes shall be painted with a thin, uniform coat of Type RS-1 emulsified asphalt immediately before the asphalt mixture is placed against them.

6. ~~7. Spreading and Finishing. The~~Temperature Requirements.
The temperature of the asphalt mixture, at the time of discharge from the haul vehicle and at the paver, shall be between 135-163°C (275 to 325°F), within 6 °C (10 °F) of the compaction temperature for the approved mix design.

7. Spreading and Finishing.
The Porous Asphalt shall be placed either in a single application at 4 inches (10 cm) thick or in two lifts. If more than one lift is used, great care must be taken to insure that the porous asphalt layer join completely. This means: keeping the time between layer placements minimal; keeping the first layer clear from dust and moisture, and minimizing traffic on the first layer.

The Contractor shall protect all exposed surfaces that are not to be treated from damage during all phases of the pavement operation.

The asphalt mixture shall be spread and finished with the specified equipment. The mixture shall be struck off in a uniform layer to the full width required and of such depth that each course, when compacted, has the required thickness and conforms to the grade and elevation specified. Pavers shall be used to distribute the mixture over the entire width or over such partial width as practical. On areas where irregularities or unavoidable obstacles make the use of mechanical spreading and finishing equipment impractical, the mixture shall be spread and raked by hand tools.

No material shall be produced so late in the day as to prohibit the completion of spreading and compaction of the mixture during daylight hours, unless night paving has been approved for the project.

No traffic will be permitted on material placed until the material has been thoroughly compacted and has been permitted to cool to below ~~60~~38 °C (~~140~~100 °F). The use of water to cool the pavement ~~will~~is not ~~be~~ permitted. The Engineer

Formatted: Normal,Normal-swmanual, Indent: Left: 0.5", First line: 0"

Formatted: No underline

Formatted: Normal,Normal-swmanual, Indent: Left: 0", First line: 0"

Formatted: Normal,Normal-swmanual, Indent: Left: 0.5", First line: 0"

Formatted: Normal,Normal-swmanual, Indent: Left: 0", First line: 0"

Formatted: Normal,Normal-swmanual, Indent: Left: 0.5", First line: 0"

Formatted: Normal,Normal-swmanual, Indent: Left: 0", First line: 0"

Formatted: Normal,Normal-swmanual, Indent: Left: 0.5"

Formatted: Normal,Normal-swmanual, Indent: Left: 0.5", First line: 0"

Formatted Table

Formatted: Font: 10 pt

reserves the right to require that all work adjacent to the pavement, such as guardrail, cleanup, and turf establishment, is completed prior to placing the wearing course when this work could cause damage to the pavement. On projects where traffic is to be maintained, the Contractor shall schedule daily pavement operations so that at the end of each working day all travel lanes of the roadway on which work is being performed are paved to the same limits. Suitable aprons to transition approaches, where required, shall be placed at side road intersections and driveways as directed by the Engineer.

8. ~~8.~~ Compaction.

Immediately after the asphalt mixture has been spread, struck off, and surface irregularities adjusted, it shall be thoroughly and uniformly compacted by rolling. The compaction objective is 16% - 19% in place void content (Corelock).

Breakdown rolling shall occur when the mix temperature is between 135-163°C (275 to 325°F).

Intermediate rolling shall occur when the mix temperature is between 93-135°C (200 to 275°F).

Finish rolling shall occur when the mix temperature is between 66-93°C (150 to 200°F).

The cessation temperature occurs at approximately 79°C (175°F), at which point the mix becomes resistant to compaction. If compaction has not been done at temperatures greater than the cessation temperature, the pavement will not achieve adequate durability.

The surface shall be rolled when the mixture is in the proper condition and when the rolling does not cause undue displacement, cracking, or shoving.

Rollers or oscillating vibratory rollers, ranging from 8-12 tons, shall be used for compaction. The number, mass (weight), and type of rollers furnished shall be sufficient to obtain the required compaction while the mixture is in a workable condition. Generally, one breakdown roller will be needed for each paver used in the spreading operation.

To prevent adhesion of the mixture to the rolls, rolls shall be kept moist with water or water mixed with very small quantities of detergent or other approved material. Excess liquid will not be permitted.

Along forms, curbs, headers, walls, and other places not accessible to the rollers, the mixture shall be thoroughly compacted with hot or lightly oiled hand tampers, smoothing irons or with mechanical tampers. On depressed areas, either a trench roller or cleated compression strips may be used under the roller to transmit compression to the depressed area.

Formatted: Normal,Normal-swmanual, Indent: Left: 0.5", First line: 0"

Formatted: Normal,Normal-swmanual, Indent: Left: 0.5", First line: 0"

Formatted Table

Formatted: Font: 10 pt

Other combinations of rollers and/or methods of compacting may be used if approved in writing by the Engineer, provided the compaction requirements are met.

Unless otherwise specified, the longitudinal joints shall be rolled first. Next, the Contractor shall begin rolling at the low side of the pavement and shall proceed towards the center or high side with lapped rollings parallel to the centerline. The speed of the roller shall be slow and uniform to avoid displacement of the mixture, and the roller should be kept in as continuous operation as practical. Rolling shall continue until all roller marks and ridges have been eliminated.

Rollers will not be stopped or parked on the freshly placed mat.

It shall be the responsibility of the Contractor to conduct whatever process control the Contractor deems necessary. Acceptance testing will be conducted by the Engineer using cores provided by the Contractor.

Any mixture that becomes loose and broken, mixed with dirt, or is in any way defective shall be removed and replaced with fresh hot mixture. The mixture shall be compacted to conform to the surrounding area. Any area showing an excess or deficiency of binder shall be removed and replaced. These replacements shall be at the Contractor's expense.

~~Vibratory rollers shall not be used.~~

If the Engineer determines that unsatisfactory compaction or surface distortion is being obtained or damage to highway components and/or adjacent property is occurring using vibratory compaction equipment, the Contractor shall immediately cease using this equipment and proceed with the work in accordance with the f~~our~~ifth paragraph of this ~~S~~subsection.

The Contractor assumes full responsibility for the cost of repairing all damages that may occur to roadway or parking lot components and adjacent property if vibratory compaction equipment is used. After final rolling, no vehicular traffic of any kind shall be permitted on the surface until cooling and hardening has taken place, and in no case within the first 48 hours. For small batch jobs, curing can be considered to have occurred after the surface temperature is less than 100 ºF (38 ºC). Curing time is preferably one week, or until the entire surface temperature cools below 100 ºF (38 ºC). Provide barriers as necessary at no extra cost to the Owner to prevent vehicular use; remove at the discretion of the Engineer.

9. ~~9.~~ Joints.

Formatted: Normal,Normal-swmanual, Indent: Left: 0.5", First line: 0"

Formatted: Normal,Normal-swmanual, Indent: Left: 0", First line: 0"

Formatted Table

Formatted: Font: 10 pt

Joints between old and new pavements or between successive day's work shall be made to ensure a thorough and continuous bond between the old and new mixtures. Whenever the spreading process is interrupted long enough for the mixture to attain its initial stability, the paver shall be removed from the mat and a joint constructed.

Butt joints shall be formed by cutting the pavement in a vertical plane at right angles to the centerline, at locations approved by the Engineer. The Engineer will determine locations by using a straightedge at least 4.9 m (16 feet) long. The butt joint shall be thoroughly coated with Type RS-1 emulsified asphalt just prior to depositing the pavement mixture when pavement resumes.

Tapered joints shall be formed by tapering the last 450 to 600 mm (18 to 24 inches) of the course being laid to match the lower surface. Care shall be taken in raking out and discarding the coarser aggregate at the low end of the taper, and in rolling the taper. The taper area shall be thoroughly coated with Type RS-1 emulsified asphalt just prior to resuming pavement. As the paver places new mixture on the taper area, an evenly graduated deposit of mixture shall complement the previously made taper. Shovels may be used to add additional mixture if necessary. The joint shall be smoothed with a rake, coarse material discarded, and properly rolled.

Longitudinal joints that have become cold shall be coated with Type RS-1 emulsified asphalt before the adjacent mat is placed. If directed by the Engineer, joints shall be cut back to a clean vertical edge prior to applying the emulsion.

10. ~~10.~~ Surface Tolerances.

The surface will be tested by the Engineer using a straightedge at least 4.9 m (16 feet) in length at selected locations parallel with the centerline. Any variations exceeding 3 mm (1/8 inch) between any two contact points shall be satisfactorily eliminated. A straightedge at least 3 m (10 feet) in length may be used on a vertical curve. The straightedges shall be provided by the Contractor.

~~11.~~ Work shall be done expertly throughout, without staining or injury to other work. Transition to adjacent impervious asphalt pavement shall be merged neatly with flush, clean line. Finished pavement shall be even, without pockets, and graded to elevations shown on drawing.

~~12.~~ Porous pavement beds shall not be used for equipment or materials storage during construction, and under no circumstances shall vehicles be allowed to deposit soil on paved porous surfaces.

11. ~~13.~~ Repair of Damaged Pavement.

Any existing pavement on or adjacent to the site that has been damaged as a result of construction work shall be repaired to the satisfaction of the Engineer without additional cost to the Owner.

Formatted: Normal,Normal-swmanual, Indent: Left: 0.5", First line: 0"

Formatted: Normal,Normal-swmanual, Indent: Left: 0", First line: 0"

Formatted: Normal,Normal-swmanual, Indent: Left: 0.5", First line: 0"

Formatted: Normal,Normal-swmanual, Indent: First line: 0"

Formatted: Normal,Normal-swmanual, Indent: Left: 0.5", First line: 0", No widow/orphan control

Formatted Table

Formatted: Font: 10 pt

12. ~~14.~~ Striping Paint

a. ~~a. Sweep~~Vacuum and clean surface to eliminate loose material and dust.

b. ~~b.~~ Paint 4 ~~-~~ inch wide parking striping and traffic lane striping in accordance with layouts of plan. Apply paint with mechanical equipment to produce uniform straight edges. Apply in two coats at manufacturer's recommended rates. Provide clear, sharp lines using white traffic paint~~, installed in accordance with VAOT Specifications.~~

c. ~~c.~~ Color for Handicapped Markings: Blue

C. QC/QA for Paving Operations

1. The full permeability of the pavement surface shall be tested by application of clean water at the rate of at least 5 gpm (23 lpm) over the surface, using a hose or other distribution devise. Water used for the test shall be clean, free of suspended solids and deleterious liquids and will be provided at no extra cost to the Owner. All applied water shall infiltrate directly without large puddle formation or surface runoff, and shall be observed by the Engineer.

2. Testing and Inspection: Employ at Contractor's expense an inspection firm acceptable to the Engineer to perform soil inspection services, staking and layout control, and testing and inspection of site grading and pavement work. Inspection and list of tests shall be reviewed and approved in writing by the Engineer prior to starting construction. All test reports must be signed by a licensed Engineer.

3. Test in-place base and surface course for compliance with requirements for thickness and surface smoothness. Repair or remove and replace unacceptable work as directed by the Engineer.

4. Surface Smoothness: Test finished surface for smoothness ~~even drainage,~~ using a ~~ten~~10-foot straightedge applied parallel with and at right angles to the centerline of the paved area. Surface will not be accepted if gaps or ridges exceed 3/16 of an inch.

5. QC/QA requirements during paving are summarized in Table F-14.

Formatted: Normal,Normal-swmanual, Indent: First line: 0"

Formatted: Heading4, Indent: Left: 0.5", Hanging: 0.25", Numbered + Level: 1 + Numbering Style: 1, 2, 3, … + Start at: 5 + Alignment: Left + Aligned at: 0.5" + Tab after: 0.19" + Indent at: 1"

Formatted: List Paragraph, Indent: Left: 0.75", Numbered + Level: 1 + Numbering Style: a, b, c, … + Start at: 1 + Alignment: Left + Aligned at: 0.25" + Indent at: 0.5"

Formatted: Indent: Left: 0", Hanging: 0.25", Space Before: 12 pt, After: 6 pt, Tab stops: 0.25", Left

Formatted: Font: Arial

Formatted: List Paragraph, Indent: Left: 0", First line: 0"

Formatted Table

Formatted: Font: 10 pt

Table F-14 -QC/QA requirements during paving.

Activity	Schedule/ Frequency	Tolerance
Inspect truck beds for pooling (draindown)	every truck	NA
Take surface temp. behind joint heater	each pull	6°C (10°F) of compaction temp
Consult with Engineer to determine locations of butt joints	as needed	NA
Test surface smoothness & positive drainage with a 10 ft straightedge	after compaction	4.5 mm (3/16")
Consult with Engineer to mark core locations for QA testing	after compaction	NA
Hose test with at least 5 gpm water	after compaction	immediate infiltation, no puddling

Activity	Schedule/ Frequency	Tolerance
Inspect truck beds for pooling (draindown)	every truck	NA
Take surface temp. behind joint heater	each pull	6°C (10°F) of compaction temp
Consult with Engineer to determine locations of butt joints	as needed	NA
Test surface smoothness & positive drainage with a 10 ft straightedge	after compaction	4.5 mm (3/16")
Consult with Engineer to mark core locations for QA testing	after compaction	NA
Hose test with at least 5 gpm water	after compaction	immediate infiltation, no puddling

PART 4. REFERENCES

CalTrans, January 2003, California Stormwater BMP Handbook 3 of 8 New Development and Redevelopment, California Dept. of Transportation, Sacramento, CA www.cabmphandbooks.com

USEPA, September, 1999, Storm Water Technology Fact Sheet: Infiltration Drainfields, Number: 832F99018 USEPA, Office of Water, Washington, DC http://www.epa.gov/npdes/pubs/infltdrn.pdf

USEPA, September 2004, Stormwater Best Management Design Guide: Volume 1 General Considerations, Office of Research and Development, EPA/600/R-04/121, Washington, D.C.

Vermont Agency of Transportation, 2006, 2006 Standard Specifications for Construction Book, Division 700, Section 708, Montpelier, VT. http://www.aot.state.vt.us/conadmin/2006StandardSpecs.htm

Formatted: Font: Arial, Bold, Font color: Auto

Formatted: Font: Arial, Bold, Font color: Auto

Formatted: Default, Indent: Left: 0.4", First line: 1", Keep with next

Formatted Table

Formatted: Font: 10 pt

Wisconsin Department of Natural Resources, Feb. 2004, Site Evaluation for Stormwater Infiltration(1002), Wisconsin Department of Natural Resources Conservation Practice Standards Madison, WI

Formatted: Font: Arial

Formatted: Heading 3,3SWManual, Left, Indent: Left: 2.05", Don't keep with next

Formatted Table

Formatted: Font: 10 pt

F.4.2 Pervious Concrete Notes and Specifications

Pervious concrete pavement does not look or behave like typical concrete pavements. The finished surface is not tight and uniform, but is open and varied. Surface irregularities and minor amounts of surface raveling are normal. Traditional concrete testing procedures for strength and slump are not applicable. Pervious Concrete is tested instead for consistency, void content and thickness; methods which are outlined in this document to help assure a long life, drainable pavement.

Owners, architects and engineers are strongly encouraged to visit locations where pervious concrete pavement has been installed before making the decision to use the material.

Technical assistance and installation training is available from your local cement and concrete associations. Planning, design, materials and construction information can be provided. ~~In Northern New England, you can contact the~~The following associations ~~for~~can provide guidance:

Northern New England Concrete Promotion Association
50 Market Street
Suite 1A #221
South Portland, ME 04106
Phone: (888)875-3232
Fax: (207)221-1126
Email: info@nnecpa.org
Web: www.nnecpa.org

Northeast Cement Shippers Association
1580 Columbia Turnpike
Building 1, Suite 1
Castleton, NY 12033
Telephone: (518) 477-4925 / 4926
Facsimile: (518) 477-4927
Web: www.necementshippers.com

National Ready Mix Concrete Association
900 Spring Street
Silver Spring, MD 20910
Phone: 301-587-1400
888-84NRMCA (846-7622)
Fax 301-585-4219
www.perviouspavements.org
Email: info@nrmca.org

Formatted Table

Formatted: Font: 10 pt

PORTLAND CEMENT PERVIOUS CONCRETE PAVEMENT

PART 1 GENERAL

1.01 Scope of Work:

A. The Work to be completed under this contract includes the furnishing of all labor, materials and equipment necessary for construction of Portland Cement Pervious Concrete Pavement for streets, parking & pedestrian areas in conformance with the plans and specifications.

1.02 References:

A. American Concrete Institute
   1. ACI 305 "Hot Weather Concreting"
   2. ACI 522 "Report on Pervious Concrete"
   3. ACI Flatwork Finisher Certification Program
   4. ACI Field Technician Certification Program

B. American Society for Testing and Materials
   1. ASTM C29 "Test for Bulk Density (Unit Weight) and Voids in Aggregate"
   2. ASTM C33 "Specification for Concrete Aggregates"
   3. ASTM C42 "Test Method for Obtaining and Testing Drilled Cores and Sawed Beams of Concrete."
   4. ASTM C94 Specification for Ready-Mixed Concrete
   5. ASTM C 117 "Test Method for Material Finer than 75-Jlm (No. 200) Sieve in Mineral Aggregates by Washing."
   6. ASTM Cl38 "Test Method for Density (Unit Weight), Yield and Air Content (Gravimetric) of Concrete."
   7. ASTM Cl40 "Test Methods for Sampling and Testing Concrete Masonry Units and Related Units"
   8. ASTM C150 "Specification for Portland Cement"
   9. ASTM C 172 "Practice for Sampling Freshly Mixed Concrete"
   10. ASTM C260 "Specification for Air-Entraining Admixtures for Concrete"
   11. ASTM C494 "Specification for Chemical Admixtures for Concrete"
   12. ASTM C595 "Specification for Blended Hydraulic Cements"
   13. ASTM C618 "Specification for Coal Fly Ash and Raw or Calcined Natural Pozzolan for Use as a Mineral Admixture in Portland Cement Concrete."
   14. ASTM C989 "Specification for Ground Granulated Blast-Furnace Slag for Use in Concrete and Mortars."
   15. ASTM CIOn "Practice for Laboratories Testing Concrete and Concrete Aggregates for Use in Construction and Criteria for Laboratory Evaluation."
   16. ASTM C 1602 "Specification for Mixing Water Used in the Production of Hydraulic Cement Concrete"
   17. ASTM 01557 "Test Methods for Laboratory Compaction Characteristics of Soil Using Modified Effort (56,000 ft-lbf/ft^3)."
   18. 03385 "Test Method for Infiltration Rate of Soils in Field Using Double-Ring Infiltrometer"
   19. ASTM E329 "Specification for Agencies Engaged in the Testing

Formatted Table

Formatted: Font: 10 pt

and/or Inspection of Materials Used in Construction."

1.03 Quality Assurance:

A. Prospective contractors shall attend a pre-bid meeting where the pervious concrete pavement process will be described by industry representatives ~~from Northern New England Concrete Promotion Association~~.

B. Prior to award the contractor shall submit evidence of two successful Pervious Concrete Pavement projects including but not limited to the following:

1. Project name and address, owner name and contact information
2. Test results including density (unit weight), void content and thickness

This requirement may be waived by the owner provided the contractor can demonstrate successful experience in the concrete industry and constructs test panel(s) for inspection and testing.

C. At least two members, or 30% of the crew (whichever is greater) shall be certified by the ACI Flatwork Finisher program and be NRMCA Certified Pervious Concrete Technicians.

1.04 Special Equipment: Pervious concrete requires specific equipment for compaction and jointing. The pavement shall be jointed and compacted using the methods listed.

A. Rolling compaction shall be achieved using a steel pipe that spans the width of the section placed and exerts a vertical pressure of at least 10 psi on the concrete.

B. When joints are placed in pervious pavements, they may be constructed by rolling, forming or sawing.
Rolled joints shall be formed using a "salt roller" to which a beveled fin with a minimum depth of y.. The thickness of the slab has been welded around the circumference of a steel roller. Sawed joints shall be constructed using an early entry or wet saw.

1.05 Submittals: Prior to commencement of the work the contractor~~, working in conjunction with Northern New England Concrete Promotion Association,~~ shall submit the following:

A. Concrete materials:

1. Proposed concrete mixture proportions including all material weights, volumes, density (unit weight), water cement ratio, and void content.
2. Aggregate type, source and grading.
3. Cement and admixture manufacturer certifications

B. Qualifications: Evidence of qualifications listed under Quality Assurance.

C. Project details: Specific plans, details, schedule, construction procedures and quality control plan.

D. Subcontractors: List all materials suppliers and subcontractors to be used on the project.

1.06 Test Panels: Prior to construction, test panel(s) shall be placed and approved by the owner. The owner is permitted to waive this requirement based on contractor qualifications.

Formatted Table

Formatted: Font: 10 pt

A. Test panel(s) shall be constructed in accordance with the plans and specifications. A minimum 225 sq. ft panel size shall be placed, jointed and cured using materials, equipment, and personnel proposed for the project.

B. Quality: Test panels shall have acceptable surface finish, joint details, thickness, porosity and curing procedures and shall comply with the testing and acceptance standards listed in the Quality Control section of this specification.

C. If test panels placed at the site are found to be deficient in thickness, density (unit weight) or percentage of voids, or of an unacceptable appearance, they shall be removed and taken to an approved landfill or recycling facility. If test panels are found to be satisfactory, they may be left in-place and included in the completed work.

PART 2 MATERIALS

2.01 Cement: Portland cement Type II or V conforming to ASTM Cl50 or Portland cement Type IP or IS conforming to
ASTM C595.

2.02 Supplementary Cementitious Materials:

A. Class F Fly ash conforming to ASTM C618

B. Ground Iron Blast-Furnace Slag conforming to ASTM C989

2.03 Chemical Admixtures:

A. Air entraining agents shall comply with ASTM C260.

B. Chemical Admixtures shall comply with ASTM C494.

C. Hydration stabilizers are permitted to be used when it is necessary to increase concrete placement time to 90 minutes and improve finishing operations.

2.04 Aggregates:

A. Coarse aggregate shall comply with ASTM C33. Size 8 (3/8" to No. 16) or Size 89 (3/8 in. to No. 50) shall
be used unless an alternate size is approved for use based on meeting the project requirements. Fine aggregate complying with ASTM C33, if used, shall not exceed 3 cu. ft.

B. Larger aggregate sizes may increase porosity but can decrease workability. Avoid well graded aggregates as they may reduce porosity, and may not provide adequate void content.

C. Where available, natural rounded aggregates are recommended.

2.05 Water: Water shall comply with ASTM C 1602.

2.06 Mixture Proportions: The composition of the proposed concrete mixtures shall be submitted to the owner's representative for review and/or approval and shall comply with the following provisions unless an alternative composition is demonstrated to comply with the project requirements.

A. Cementitious Content: For vehicle pavements, total cementitious content shall not be less than 630 lbs/cy. For pedestrian pavements, total cementitious shall not be less than 600 lbs/cy.

B. Supplementary cementitious content: Fly ash: 25% maximum. Slag: 50%

Formatted: Indent: Left: 0.02"

Formatted Table

Formatted: Font: 10 pt

maximum

C. Water / Cementitious Ratio: Maximum 0.30 for vehicle pavements and 0.35 for pedestrian pavements.

D. Aggregate Content: The bulk volume of aggregate per cubic yard shall be equal to 27 cubic foot when calculated from the dry rodded density (unit weight) determined in accordance with ASTM C29 jigging procedure.

E. Admixtures: Admixtures shall be used in accordance with the manufacturer's instructions and recommendations.

F. Mix Water: The quantity of mixing water shall be established to produce a pervious concrete mixture of the desirable workability to facilitate placing, compaction and finishing to the desired surface characteristics.

PART 3
EXECUTION
3.01 Subgrade:

A. Material: The top 6 inches shall be composed of granular or gravelly soil that is predominantly sandy with no more than a moderate amount of silt or clay. Granular sub-base may be placed over the subgrade.

B. Permeability: Subgrade shall have a minimum permeability of 0.5 inch per hour determined in accordance with ASTM 03385.

C. Compaction: Compact sub-grade to a minimum 90% and a maximum 95%. Over-compaction can inhibit subgrade percolation. Compaction shall be in accordance with ASTM 01557.

D. Fill: If fill material is required to bring the subgrade to final elevation, it shall be clean and free of deleterious materials. It shall be placed in 6-inch maximum layers, and compacted by a mechanical vibratory compactor to a minimum density of 90% in accordance with ASTM 01557.

E. Moisture: The subgrade moisture content shall be 1% - 3% above optimum as determined by ASTM 01557.

F. Verify subgrade preparation, grade, and conduct permeability & density tests for conformance to project requirements.

3.02 Formwork:

A. Form materials are permitted to be of wood or steel and shall be of width to the depth of the pavement.
Forms shall be of sufficient strength and stability to support mechanical equipment without deformation of plan profiles following spreading, strike-off and compaction operations. Forms may have a removable spacer placed above the depth of pavement. The spacers shall be removed following placement and vibratory strike-off to allow roller compaction.

3.03 Mixing and Hauling:

A. Production: Pervious concrete shall be manufactured and delivered in accordance with ASTM C 94.

B. Mixing: Mixtures shall be produced in central mixers or in truck mixers. When concrete is delivered in agitating or non-agitating units, the concrete

Formatted Table

Formatted: Font: 10 pt

shall be mixed in the central mixer for a minimum of 1.5 minutes or until a homogenous mix is achieved. Concrete mixed in truck mixers shall be mixed at the speed designated as mixing speed by the manufacturer for 75 - 100 revolutions.

C. Transportation: The pervious concrete mixture may be transported or mixed on site and discharge of individual loads shall be completed within one (1) hour of the introduction of mix water to the cement. Delivery times may be extended to 90 minutes when a hydration stabilizer is used.

D. Discharge: Each truckload will be visually inspected for consistency of concrete mixture. Water addition is permitted at the point of discharge to obtain the required mix consistency provided a measurable quantity is used before more than 0.5 cubic yard of concrete is discharged. A minimum of 30 revolutions at the manufacturer's designated mixing speed shall be required following the addition of any water to the mix. Discharge shall be a continuous operation and shall be completed as quickly as possible. Concrete shall be deposited as close to its final position as practical and such that discharged concrete is incorporated into previously placed plastic concrete.

3.04 Placing and Finishing:

A. The Contractor shall provide either slip form or vibratory form riding equipment to place the concrete unless otherwise approved by the Owner or Engineer in writing. Use of roller screeds is preferred. Internal vibration shall not be permitted. Unless otherwise permitted placement procedures shall utilize a mechanical vibratory screed to strike off the concrete 1;i" to 3/4" above final height, utilizing the form spacers described in Formwork.

B. Placed concrete shall not be disturbed while in the plastic state. Low spots after the screeding operation shall be filled up and tamped with hand tampers.

C. Following strike-off, remove spacers and compact the concrete to the form level, utilizing a steel roller, a plate compactor or other method approved by the Owner. Care shall be taken during compaction that sufficient compactive force is achieved without excessively working the concrete surface that might result in sealing off the surface porosity.

D. Hand tampers shall be used to compact the concrete along the slab edges immediately adjacent to the forms.
After compaction, inspection and repair, no further finishing shall be performed on the concrete. Surface curing shall begin immediately.

E. The pervious concrete pavement shall be compacted to the required cross-section and shall not deviate more than +/- 3/8 inch in 10 feet from profile grade.

3.05 Jointing

A. Joints in pervious pavements can be precluded at the option of the owner.

B. Control (contraction) joints shall be installed at regular intervals not to exceed 20 feet, or two times the width of the placement. The control joints shall be installed at 1/4 the depth (to a maximum depth of 1/3*”)* of the

Formatted Table

Formatted: Font: 10 pt

thickness of the pavement. These joints must be installed in the plastic concrete by tooling method.

C. Jointing plastic concrete: Joints installed in the plastic concrete shall be constructed utilizing a small roller as described in the Special Equipment section of this specification. When this option is used it shall be performed immediately after roller compaction and prior to curing.

D. Jointing hardened concrete: Saw-cuts shall be made as soon as the pavement has hardened sufficiently to prevent raveling and uncontrolled cracking. Early entry sawing occurs later with pervious concrete than with conventional concrete. For either method, the curing cover shall be removed and the surface kept misted to prevent moisture loss. After sawing the curing cover shall be securely replaced for the remainder of the curing cycle.

E. Transverse construction joints: Transverse construction joints shall be installed whenever placing is suspended for 30 minutes or whenever concrete is no longer workable.

F. Isolation joints: Isolation joints shall used when abutting fixed vertical structures such i.e. light pole bases, building foundations, etc. Isolation material shall be positioned before concrete is placed and shall be the depth of the pavement section.

3.06 Curing:

A. Curing procedures shall begin no later than 20 minutes after final placement operations have been completed. The pavement surface shall be covered with a minimum of six (6) mil thick polyethylene sheet or other approved covering material. The cover shall overlap all exposed edges and shall be secured to prevent dislocation due to winds or adjacent traffic conditions. For additional guidance on hot weather concreting, see ACI 305.

B. The low water/cement ratio and high amount of exposed surface of pervious concrete makes it especially susceptible to drying out. Immediately after screeding, the surface shall be kept moist and evaporation prevented using a spray applied curing compound and/or evaporation retarder immediately after screeding.

C. The curing cover shall remain securely in place for a minimum of 7 days. No vehicular traffic shall be permitted on the pavement until curing is complete and no truck traffic shall be permitted for at least 14 days. The owner has the option of permitting earlier traffic opening times.

3.07 Quality Control:

A. The owner shall employ a testing laboratory that conforms to the requirements of ASTM E329 and ASTM CI077. All personnel engaged in testing shall be certified by the American Concrete Institute as ACI Concrete Field Technicians or equivalent.

B. Traditional portland cement pavement testing procedures based on strength and slump control are not applicable to this type of pavement material.

C. Concrete tests shall be performed for each 150 cubic yards or fraction thereof with a minimum of one test for each day's placement.

Formatted Table

Formatted: Font: 10 pt

D. Plastic concrete shall be sampled in accordance with ASTM C 172 and density (unit weight) measured in accordance with ASTM C 138. The density (unit weight) of the delivered concrete shall be +/- 5 pcf of the design density (unit weight).

E. Plastic void content shall be calculated as per ASTM Cl38, Gravimetric Air Determination and compared to the void percentage required by the Hydraulic design. Unless otherwise specified, Void content shall be between 15% and 25%.

F. Hardened concrete shall be tested at a rate of one set of three cores per 150 cy of concrete placed on one day or fraction thereof. The cores shall be drilled in accordance with ASTM C 42. The cores when measured for length shall not be more than Y2 inch less than the specified design thickness.

G. The cores shall be tested for density (unit weight) and void content using ASTM 140. Density (unit weight) shall be +/- 5 pcf of the design unit weight. Void content shall be not be greater than 2% below the specified design void content. Void content shall calculated as follows:

% Voids = I - (Dd/Di) * 100

where: Dd = oven dried density of core

Di = immersed density of core

3.08 Basis of Payment

A. Pervious concrete pavement shall be paid for based on the square yard (foot) of in-place product including materials and labor. Payment shall be reduced for the following deficiencies:

Deficiency	**Measurement**	**Payment Reduction**
Thickness	1/2" to 1"	25%
Thickness	Greater than - 1"	remove and replace
Void Content	Greater than 3%	25%
	specified void content	

END OF SECTION

"This specification is intended solely for use by professional personnel who are competent to evaluate the significance and limitations of the information provided and who will accept responsibility for the application of this information. ~~Northern New England Concrete Promotion Association disclaims~~ The authors disclaim any and all responsibility and liability for the accuracy and the application of the information contained in this publication to the full extent permitted by law. "

Formatted Table

Formatted: Font: 10 pt

F.5 Construction Standards/Specifications for Filter BMPs

F.5.1 Sand Filter Specifications

F.5.1.1 Material Specifications for Sand Filters

The allowable materials for sand filter construction are detailed in Table F-16.

F.5.1.2 Sand Filter Testing Specifications

Underground sand filter applications, facilities within sensitive groundwater aquifers, and filters designed to serve urban LUHPPLs are to be tested for watertightness prior to placement of filter layers. The systems should be tested for watertightness using the US EPA test procedures as described below and included in the Onsite Wastewater Treatment Systems Manual (USEPA, 2002). Hydrostatic or vacuum tests, and manway risers and inspection ports should be included in the test. The professional association representing the materials industry of the type of tank construction (e.g., the National Pre-cast Concrete Association) should be contacted to establish the appropriate testing criteria and procedures. Test criteria for precast concrete are presented below in Table F-15.

Table F-15 Watertightness Testing Procedure/Criteria for Precast Concrete Tanks (USEPA, 2002)

Standard	Hydrostatic test		Vacuum test	
	Preparation	Pass/fail criterion	Preparation	Pass/fail criterion
C 1227, ASTM (1993)	Seal tank, fill with water, and let stand for 24 hours. Refill tank.	Approved if water level is held for 1 hour	Seal tank and apply a vacuum of 2 in. Hg.	Approved if 90% of vacuum is held for 2 minutes.
NPCA (1998)	Seal tank, fill with water, and let stand for 8 to 10 hours. Refill tank and let stand for another 8 to 10 hours.	Approved if no further measurable water level drop occurs	Seal tank and apply a vacuum of 4 in. Hg. Hold vacuum for 5 minutes. Bring vacuum back to 4 in. Hg.	Approved if vacuum can be held for 5 minutes without a loss of vacuum.

All overflow weirs, multiple orifices and flow distribution slots to be field-tested as to verify adequate distribution of flows.

F.5.1.3 Sand Filter Construction Specifications

Provide sufficient maintenance access; 12-ft-wide road with legally recorded easement. Vegetated access slopes to be a maximum of 10%; gravel slopes to 15%; paved slopes to 25%.

Absolutely no runoff is to enter the filter until all contributing drainage areas have been stabilized.

Formatted Table

Formatted: Font: 10 pt

Surface of filter bed to be *completely level*.

All sand filters should be clearly delineated with signs so that they may be located when maintenance is due.

Surface sand filter applications shall be planted with appropriate grasses ~~as specified by local NRCS Standards and Specifications guidance~~per Appendix B and RIDOT specification section L.01.

F.5.1.4 Specifications Pertaining to Sand Filters Designed Underground

Provide manhole and/or grates to all underground and below grade structures. Manholes shall be in compliance with ~~standard specifications for each jurisdiction~~RIDOT specification section 702 - Manholes, Inlets, and Catch Basins but diameters should be 30in minimum (to comply with OSHA confined space requirements) but not too heavy to lift. Aluminum and steel louvered doors are also acceptable. Ten-inch long (minimum) manhole steps (12 in o.c.) shall be cast in place or drilled and mortared into the wall below each manhole. A 5 ft minimum height clearance (from the top of the sand layer to the bottom of the slab) is required for all permanent underground structures. Lift rings are to be supplied to remove/replace top slabs. Manholes may need to be grated to allow for proper ventilation; if required, place manholes *away* from areas of heavy pedestrian traffic.

Underground sand filters shall be constructed with a dewatering gate valve located just above the top of the filter bed should the bed clog.

Underground sand beds shall be protected from trash accumulation by a wide mesh geotextile screen to be placed on the surface of the sand bed; screen is to be rolled up, removed, cleaned and re-installed during maintenance operations.

Formatted Table

Formatted: Font: 10 pt

Table F-16 Material Specifications for Sand Filters

Parameter	Specification	Size	Notes
Sand	clean AASHTO M-6 or ASTM C-33 concrete sand	0.02" to 0.04"	Sand substitutions such as Diabase and Graystone #10 are not acceptable. No calcium carbonated or dolomitic sand substitutions are acceptable. No rock dust can be used for sand.
Peat	ash content: < 15% pH range: 5.2 to 4.9 loose bulk density 0.12 to 0.15 g/cc	n/a	The material must be Reed-Sedge Hemic Peat, shredded, uncompacted, uniform, and clean.
Underdrain gravel	RIDOT Specs. Sec. 300 AASHTO M-43	0.25" to 0.75"	Must be washed, clean gravel; refer to Appendix Section F.4.1, Part 2 for applicable material specs.
Geotextile Fabric (if required)	ASTM D-751 (puncture strength - 125 lb.) ASTM D-1117 (Mullen Burst Strength - 400 psi) ASTM D-1682 (Tensile Strength - 300 lb.)	0.08" thick equivalent opening size of #80 sieve	Must maintain 125 gpm per sq. ft. flow rate. Note: a 4" pea gravel layer may be substituted for geotextiles meant to separate filter layers.
Impermeable Liner (if required)	ASTM D 751 (thickness) ASTM D 412 (tensile strength 1,100 lb., elongation 200%) ASTM D 624 (Tear resistance - 150 lb./in) ASTM D 471 (water adsorption: +8 to -2% mass)	30 mil thickness	Liner to be ultraviolet resistant. A geotextile fabric should be used to protect the liner from puncture.
Underdrain Piping	RIDOT Specs. Sec. 703 ASTM D-1785 or AASHTO M-278	4-6" rigid schedule 40 PVC	3/8" perf. @ 6" on center, 4 holes per row; minimum of 3" of gravel over pipes; not necessary underneath pipes
Concrete (Cast-in-place)	See RIDOT ~~Standards and~~ Specs. Sec. 600 f'c = 3500 psi, normal weight, air-entrained; reinforcing bars to meet ASTM 615-60	n/a	on-site testing of poured-in-place concrete required: 28 day strength and slump test; all concrete design (cast-in-place or pre-cast) *not using previously approved local or ~~State~~RI standards* requires design drawings sealed and approved by a RI-licensed ~~professional~~ structural ~~engineer.~~PE.
Concrete (pre-		n/a	SEE ABOVE NOTE

Formatted: Tab stops: Not at 0" + 0.5" + 1" + 1.5" + 2" + 2.5" + 3" + 3.5" + 4"

Formatted: Left

Formatted Table

cast)	See RIDOT Specs. Sec. 600 per pre-cast manufacturer		
non-rebar steel	ASTM A-36	n/a	structural steel to be hot-dipped galvanized ASTM A123

Formatted Table

Table F-17 Sand/Organic Filter System Construction Inspection Checklist

Project:

Location:

Site Status:

Date:

Time:

Inspector:

CONSTRUCTION SEQUENCE	SATISFACTORY / UNSATISFACTORY	COMMENTS
1. Pre-construction		
Pre-construction meeting		
Runoff diverted		
Facility area cleared		
Facility location staked out		
2. Excavation		
Size and location		
Side slopes stable		
Foundation cleared of debris		
If designed as exfilter, excavation does not compact subsoils		
Foundation area compacted		
3. Structural Components		
Dimensions and materials		
Forms adequately sized		

Formatted Table

Formatted: Font: 10 pt

CONSTRUCTION SEQUENCE	SATISFACTORY / UNSATISFACTORY	COMMENTS
Concrete meets standards		
Prefabricated joints sealed		
Underdrains (size, materials)		
4. Completed Facility Components		
24-hour water filled test		
Contributing area stabilized		
Filter material per specification		
Underdrains installed to grade		
Flow diversion structure properly installed		
Pretreatment devices properly installed		
Level overflow weirs, multiple orifices, distribution slots		
5. Final Inspection		
Dimensions		
Surface completely level		
Structural components		
Proper outlet		
Ensure that site is properly stabilized before flow is directed to the structure.		

Comments:

Formatted Table

Formatted: Font: 10 pt

Actions to be Taken:

Formatted Table

Formatted: Font: 10 pt

F.5.2 Construction Specifications for Bioretention Systems

F.5.2.1 Material Specifications

The allowable materials to be used in bioretention area are detailed in Table F-18.

F.5.2.2 ~~Planting~~Bioretention Soil

The soil should be a uniform mix, free of stones, stumps, roots or other similar objects larger than two inches. No other materials or substances should be mixed or dumped within the bioretention area that may be harmful to plant growth, or prove a hindrance to the planting or maintenance operations. The ~~planting~~bioretention soil should be free of noxious weeds.

The bioretention system shall utilize planting soil having a composition as follows:

Sand: 85-88%
Soil fines: 8 to 12% (no more than 2% clay)
Organic Matter*: 3 to 5%

*Note: For bioretention applications with a ~~planting~~ soil depth of less than 4 feet, add 20% (by volume) of well aged (3 months), well aerated, leaf compost (or approved equivalent) to the above planting soil mixture. Where soil fines content is less than 12%, add a corresponding % of leaf compost.

A textural analysis is required to ensure the bioretention soil meets the specification listed above. The ~~planting~~bioretention soil should also be tested ~~and should meet~~for the following criteria:

pH range	5.2 - 7.0
magnesium	~~35 lb./ac~~not to exceed 32 ppm
phosphorus P_2O_5	~~75 lb./ac~~not to exceed 69 ppm
potassium K_2O	~~85 lb./ac~~not to exceed 78 ppm
soluble salts	not to exceed 500 ppm

All bioretention areas should have a minimum of one test. Each test should consist of both the standard soil test for pH, phosphorus, and potassium and additional tests of organic matter, and soluble salts. ~~A textural analysis is required from the site's stockpiled topsoil. If topsoil is imported, then a texture analysis should be performed for each location where the top soil was excavated.~~

Since different labs calibrate their testing equipment differently, all testing results should come from the same testing facility.

Should the pH fall out of the acceptable range, it may be modified (higher) with lime or (lower) with iron sulfate plus sulfur.

Formatted Table

Formatted: Font: 10 pt

F.5.2.3 Mulch Layer Specifications.

~~Mulch around individual plants only. Shredded~~A finely shredded, well-aged organic hardwood mulch is the ~~only~~preferred accepted ~~mulches.~~mulch; a finely shredded, well-aged organic dark pine mulch may be accepted on a case-by-case basis. Bark dust mulches and wood chips will float and move to the perimeter of the bioretention area during a storm event and are not acceptable.

Shredded mulch must be well aged (6-12 months) for acceptance.

Mix approximately ½ the specified mulch layer into the planting soil to a depth of approximately 4 inches to help foster a highly organic surface layer.

F.5.2.4 Compaction

It is very important to minimize compaction of both the base of the bioretention area and the required backfill. When possible, use excavation hoes to remove original soil. If bioretention area is excavated using a loader, the contractor should use wide track or marsh track equipment, or light equipment with turf type tires. Use of equipment with narrow tracks or narrow tires, rubber tires with large lugs, or high pressure tires will cause excessive compaction resulting in reduced infiltration rates and storage volumes and is not acceptable. Compaction will significantly contribute to design failure.

Compaction can be alleviated at the base of the bioretention facility by using a primary tilling operation such as a chisel plow, ripper, or subsoiler. These tilling operations are performed to refracture the soil profile through the 12-in compaction zone. Substitute methods must be approved by the engineer. Rototillers typically do not till deep enough to reduce the effects of compaction from heavy equipment.

When backfilling the bioretention facility, place soil in lifts 12in or greater. Do not use heavy equipment within the bioretention basin. Heavy equipment can be used around the perimeter of the basin to supply soils and sand. Grade bioretention materials with light equipment such as a compact loader or a dozer/loader with marsh tracks.

F.5.2.5 Plant Installation

The plant root ball should be planted so 1/8th of the ball is above final grade surface. Root stock of the plant material should be kept moist during transport and on-site storage. The diameter of the planting pit should be at least six inches larger than the diameter of the planting ball. Set and maintain the plant straight during the entire planting process. Thoroughly water ground bed cover after installation.

Trees should be braced using 2 in x 2 in stakes only as necessary and for the first growing season only. Stakes are to be equally spaced on the outside of the tree ball.

Formatted Table

Formatted: Font: 10 pt

Grasses and legume seed should be tilled into the soil to a depth of at least one inch. Grass and legume plugs should be planted following the non-grass ground cover planting specifications.

The planting soil specifications provide enough organic material to adequately supply nutrients from natural cycling. The primary function of the bioretention structure is to improve water quality. Adding fertilizers defeats, or at a minimum, impedes this goal. Only add fertilizer if compost or mulch is used to amend the soil. Rototill urea fertilizer at a rate of 2 pounds per 1,000 square feet.

F.5.2.6 Underdrains

Underdrains should be in accordance with RIDOT specification section 703 – Underdrains and Combination Underdrains and the following provisions, as applicable.

Underdrains should be placed on a minimum 3'-0" wide section of filter cloth. Pipe is placed next, followed by the gravel bedding. The ends of underdrain pipes not terminating in an observation well should be capped.

The main collector pipe for underdrain systems should be constructed at a minimum slope of 0.5%. Observation wells and/or clean-out pipes must be provided (one minimum per every 1,000 square feet of surface area).

F.5.2.7 Miscellaneous

The bioretention facility may not be constructed until all contributing drainage area has been stabilized.

Formatted Table

Formatted: Font: 10 pt

Table F-18 Materials Specifications for Bioretention

Parameter	Specification	Size	Notes
Planting Soil	sand 85-88% soil fines 8 - 12% (≤ 2% clay) organics 3 - 5%	n/a	USDA soil types loamy sand or sandy loam
Mulch	shredded hardwood mulch preferred	n/a	aged 6 months, minimum
Geotextile	Class "C" apparent opening size (ASTM-D-4751) grab tensile strength (ASTM-D-4632) burst strength (ASTM-D-4833)	n/a	for use over underdrains (extend 1 – 1.5 ft each side) and as necessary on sides of bioretention basin
Sand (2"-4" layer over choker stone)	AASHTO M-6 or ASTM C-33	0.02" to 0.04"	Sand substitutions such as Diabase and Graystone #10 are not acceptable. No calcium carbonated or dolomitic sand substitutions are acceptable. No rock dust can be used for sand.
Choking Stone Layer (4" layer pea gravel)	AASHTO M43 (ASTM D 448) No. 8 or 89 gravel	0.375" to 0.75"	
Underdrain Gravel	RIDOT Specs. Sec. 703 AASHTO M-43	1.0"	Double-washed and clean of fines
Underdrain Piping	RIDOT Specs. Sec 703 ASTM D 1785 or AASHTO M-278	4 to 6" rigid schedule 40 PVC	3/8" perf. @ 6" on center, 4 holes per row; minimum of 3" of gravel over pipes; not necessary underneath pipes
Poured-in-place Concrete (if required)	See ~~State Highway Department Standards and~~RIDOT Specs~~.~~;. Sec. 600; f'c = 3,500 lb. @ 28 days, normal weight, air-entrained;	n/a	on-site testing of poured-in-place concrete required: 28-day strength and slump test; all concrete design (cast-in-place or pre-cast) *not using previously approved standards* requires design drawings sealed and approved by a RI-

Formatted: Space Before: 0 pt

Formatted Table

Formatted Table

Formatted: Font: 10 pt

	reinforcing bars to meet ASTM 615-60		licensed ~~professional~~ structural ~~engineer.~~PE.

Formatted Table

Formatted: Font: 10 pt

Table F-19 Bioretention Construction Inspection Checklist

Project:

Location:

Site Status:

Date:

Time:

Inspector:

CONSTRUCTION SEQUENCE	SATISFACTORY/ UNSATISFACTORY	COMMENTS
1. Pre-Construction		
Pre-construction meeting		
Runoff diverted		
Facility area cleared		
If designed as exfilter, soil testing for permeability		
Facility location staked out		
2. Excavation		
Size and location		
Lateral slopes completely level		
If designed as exfilter, ensure that excavation does not compact subsoils.		
Longitudinal slopes within design range		
3. Structural Components		
Stone diaphragm installed		

Formatted Table

Formatted: Font: 10 pt

CONSTRUCTION SEQUENCE	SATISFACTORY/ UNSATISFACTORY	COMMENTS
correctly		
Outlets installed correctly		
Underdrain		
Pretreatment devices installed		
Soil bed composition and texture		
4. Vegetation		
Complies with planting specs		
Topsoil adequate in composition and placement		
Adequate erosion control measures in place		
5. Final Inspection		
Dimensions		
Proper stone diaphragm		
Proper outlet		
Soil/ filter bed permeability testing		
Effective stand of vegetation and stabilization		
Construction generated sediments removed		
Contributing watershed stabilized before flow is diverted to the practice		

Comments:

Formatted Table

Formatted: Font: 10 pt

Actions to be Taken:

Formatted Table

Formatted: Font: 10 pt

F.6 Construction Standards/Specifications for Extensive Green Roofs

Extensive rooftops are commonly designed for maximum thermal and hydrological performance and minimum weight load. Construction specifications will vary based on the specific manufacturer's recommendations. General specifications for the planting media, filter layer, and drain layer are provided below, as adapted from the LID Manual for Michigan (SEMCOG, 2008).

F.6.1 Planting Media

Growth media should be a soil-like mixture containing not more than 15% organic content (wet combustion or loss on ignition methods). The appropriate grain-size distribution is essential for achieving the proper moisture content, permeability, nutrient management, and non-capillary porosity, and 'soil' structure. The grain-size guidelines vary for single and dual media vegetated cover assemblies.

Non-capillary Pore Space at Field Capacity, 0.333 bar (TMECC 03.01, A)	>= 15% (vol)
Moisture Content at Field Capacity (TMECC 03.01, A)	>= 12% (vol)
Maximum Media Water Retention (FLL)	>= 30% (vol)
Alkalinity, Ca CO3 equivalents (MSA)	<= 2.5%
Total Organic Matter by Wet Combustion (MSA)	3-15% (dry wt.)
pH (RCSTP)	6.5-8.0
Soluble Salts (DTPA saturated media extraction)"(RCSTP)	<= 6 mmhos/cm
Cation exchange capacity (MSA)	>= 10 meq/100g
Saturated Hydraulic Conductivity for Single Media Assemblies (FLL)	>= 0.05 in/min
Saturated Hydraulic Conductivity for Dual Media Assemblies (FLL)	>= 0.30 in/min

Grain-size Distribution of the Mineral Fraction - ASTM-D422 (CCREF, 2004)

<u>Single Media Assemblies:</u>	
Clay fraction (2 micron)	0
Pct. Passing US#200 sieve (i.e., silt fraction)	<= 5%
Pct. Passing US#60 sieve	<= 10%
Pct. Passing US#18 sieve	5 - 50%
Pct. Passing 1/8-inch sieve	0 - 70%

Formatted Table

Formatted: Font: 10 pt

Pct. Passing 3/8-inch sieve	75 -100%
Dual Media Assemblies:	
Clay fraction (2 micron)	0
Pct. Passing US#200 sieve (i.e., silt fraction)	5-15%
Pct. Passing US#60 sieve	10-25%
Pct. Passing US#18 sieve	20 - 50%
Pct. Passing 1/8-inch sieve	55 - 95%
Pct. Passing 3/8-inch sieve	90 -100%

Macro- and micro-nutrients shall be incorporated in the formulation in initial proportions suitable for support the specified planting.

F.6.2 Filter layer

Between the planting media and drain layer lays a filter. The filter usually comprises one or two layers of non-woven geotextile, where one of the layers may be treated with a root inhibitor (*i.e.* copper or a mild herbicide). Extensive green roofs usually employ plants with easy-to-control roots. Since root and media particle diameters can vary, filters should be specified for different media and plant types to ensure adequate flow rates for a given planting mix without losing too much silt or allowing excessive root penetration.

The Filter Layer should provide a durable separation between the drainage and growth media layers (Only lightweight non-woven geotextiles are recommended for this function).

- Unit Weight (ASTM-D3776) <= 4.25 oz/yd2
- Grab tensile (ASTM-D4632) <= 90 lb
- Mullen Burst Strength (ASTM-D4632) >= 135 lb/in
- Permittivity (ASTM-D4491) >= 2 per second

F.6.3 Protective Layer

The Protective Layer should be thermoplastic membranes with a thickness of at least 30 mils. Thermoplastic sheets can be bonded using hot-air fusion methods, rendering the seams safe from root penetration. Membranes that have been certified for use as root-barriers are recommended. At present only FLL, the German Research Society for Landscape Development and Landscape Design (***F****orschungsgesellschaft* ***L****andschaftsentwicklung* ***L****andschaftsbau e.V.*) offers a recognized test for root-barriers. Several FLL-certified materials are available in the United States. Interested American manufactures can submit products for testing to FLL-certified labs.

Formatted Table

Formatted: Font: 10 pt

F.7 Construction Standards/Specifications for Open Channels

F.7.1 Material Specifications

The recommended construction materials for open channels and filter strips are detailed in Table F-20.

F.7.1.1 Dry Swales

Roto-till soil/gravel interface approximately 6in to avoid a sharp soil/gravel interface.

Permeable soil mixture ~~(20 in to 30 in deep)~~ should meet the bioretention planting soil specifications.

Check dams, if required, shall be placed as specified.

~~System to have 6 in of freeboard, minimum.~~

Side slopes to be 2:1 minimum; (3:1 or greater preferred).

No gravel or perforated pipe is to be placed under driveways.

~~Bottom of facility should be at least 3 ft above the seasonably high water table if designed as an exfilter.~~

Seed with flood/drought resistant grasses; see Appendix B for guidance, and RIDOT specification section L.01.

~~Longitudinal slope to be 1 to 2%, maximum (up to 5% with check dams).~~

Bottom width to be 8 ft maximum to avoid braiding; larger widths may be used if proper berming is supplied (i.e., barrier between minimum widths). Width to be 2 ft minimum.

F.7.1.2 Wet Swales

~~Follow above information for dry swales, with the following exceptions: the seasonally high water table may inundate the swale; but not above the design bottom of the channel [NOTE: if the water table is stable within the channel; the WQ_v storage may start at this point]~~

Excavate into undisturbed soils; do not use an underdrain system.

~~#### F.7.1.3 Filter Strips~~

~~Construct pea gravel diaphragms 12 in wide, minimum, and 24 in deep minimum.~~

Formatted Table

Formatted: Font: 10 pt

~~Pervious berms to be a sand/gravel mix (35-60% sand, 30-55% silt, and 10-25% gravel). Berms to have overflow weirs with 6-in minimum head.~~

~~Slope range to be 2% minimum to 6% maximum.~~

Formatted Table

Formatted: Font: 10 pt

Table F-20 Open Channel Materials Specifications

Formatted: Space Before: 0 pt

Parameter	Specification	Size	Notes
Dry swale soil	sand 85-88% soil fines 8 - 12% (≤ 2% clay) organics 3 - 5%	n/a	USDA soil types loamy sand or sandy loam, soil with a higher percent organic content is preferred
Dry swale sand	ASTM C-33 fine aggregate concrete sand	0.02 in to 0.04 in	
Check Dam (pressure treated)	RIDOT Specs. Sec. 207 AWPA Standard C6	6 in x 6 in or 8 in x 8 in	*do not* coat with creosote; embed at least 3ft into side slopes
Check Dam (natural wood)	RIDOT Specs. Sec. 207 Black Locust, Red Mulberry, Cedars, Catalpa, White Oak, Chestnut Oak, Black Walnut	6 in to 12 in diameter; notch as necessary	*do not* use the following, as these species have a predisposition towards rot: Ash, Beech, Birch, Elm, Hackberry, hemlock, Hickories, Maples, Red and Black Oak, Pines, Poplar, Spruce, Sweetgum, Willow
Filter Strip sand/gravel pervious berm	sand: per dry swale sand gravel; AASHTO M-43	sand: 0.02 in to 0.04 in gravel: 2 in to 1 in	mix with approximately 25% loam soil to support grass cover crop; see Bioretention planting soil notes for more detail.
Gravel diaphragm and curtain drain	ASTM D 448	varies (No. 6) or (1/8 in to 3/8 in)	use clean bank-run gravel
underdrain gravel	RIDOT Specs. Sec. 703 AASHTO M-43	1.0 in	
underdrain	RIDOT Specs. Sec. 703 ASTM D -1785 or AASHTO M-278	4-6 in rigid Schedule 40 PVC	3/8 in perf. @ 6 in o.c.; 4 holes per row
Geotextile	See RIDOT Standards and Specs	n/a	
	~~per~~ RIDOT ~~criteria~~Specs.	~~size per RIDOT~~	

Formatted Table

~~rip rap~~riprap	Sec. 920	~~requirements~~ varies	

Formatted Table

Table F-21 Open Channel System Construction Inspection Checklist

Project:

Location:

Site Status:

Date:

Time:

Inspector:

CONSTRUCTION SEQUENCE	SATISFACTORY / UNSATISFACTORY	COMMENTS
1. Pre-Construction		
Pre-construction meeting		
Runoff diverted		
Facility location staked out		
2. Excavation		
Size and location		
Side slope stable		
Soil permeability		
Groundwater / bedrock		
Lateral slopes completely level		
Longitudinal slopes within design range		
Excavation does not compact subsoils		

Formatted Table

Formatted: Font: 10 pt

CONSTRUCTION SEQUENCE	SATISFACTORY / UNSATISFACTORY	COMMENTS
3. Check dams		
Dimensions		
Spacing		
Materials		
4. Structural Components		
Underdrain installed correctly		
Inflow installed correctly		
Pretreatment devices installed		
5. Vegetation		
Complies with planting specifications		
Topsoil adequate in composition and placement		
Adequate erosion control measures in place		
6. Final inspection		
Dimensions		
Check dams		
Proper outlet		
Effective stand of vegetation and stabilization		
Contributing watershed stabilized before flow is routed to the facility		

Formatted Table

Formatted: Font: 10 pt

Comments:

Actions to be Taken:

Formatted Table

Formatted: Font: 10 pt

<Page blank intentionally>

Formatted Table

Formatted: Font: 10 pt

APPENDIX G: POLLUTION PREVENTION AND SOURCE CONTROLS

G.1 Overview

Pollution prevention techniques must, to the extent practicable, be incorporated into all site designs, especially at commercial and light industrial sites, to minimize the potential impact those activities may have on stormwater runoff quality. Preventative source controls must also be applied in residential development, particularly in preventing floatables (trash and debris) from entering storm sewer drainage systems.

G.2 General Pollution Prevention Design Features

Inlets to stormwater management systems should incorporate trash racks wherever practicable. Storm drain marking (e.g., stenciling) to discourage dumping must also be provided at each inlet. Maintenance plans must include a schedule for regular maintenance and inspection of trash racks.

G.3 Solid Waste Containment

Proper containment of solid waste will prevent it from entering drainage systems and polluting waterways. At a minimum, apply the following pollution prevention practices:

- Trash and recycling receptacles must be provided with regular collection at all sites;
- Industrial and commercial sites must include regular street sweeping (at least annually) in their maintenance plans; and
- Pet waste stations that provide bags and waste containers are recommended at all residential developments and must be provided at multiunit dwellings, such as apartments, town houses, and condominiums.

G.4 Roads and Parking Area Management

Roads and parking areas constitute a large portion of Rhode Island's impervious surfaces and are often directly connected to storm drain systems. These impervious areas contribute relatively high concentrations of a wide variety of pollutants, including sediment, nutrients, metals, and volatile organic compounds (VOCs), among other constituents. The discussion below addresses guidance requirements related to road and parking area management:

G.4.1 Street ~~sweeping~~and Parking Lot Sweeping

Street sweeping helps to remove sediment and debris from paved surfaces, reducing potential pollutant transport to waterbodies. Street and parking lot sweeping may also reduce the need for maintenance of pretreatment devices, such catch basins and forebays that precede WVTSs or bioretention areas.

Formatted Table

Formatted: Font: 10 pt

Street sweeping is a requirement for municipalities pursuant to Phase II of the RIPDES Stormwater Regulations~~. Street~~ and ~~parking lot sweeping is~~is also recommended for private entities~~ to reduce the need for maintenance of pretreatment devices.~~. Currently, available street sweeping technology is not considered to meet the water quality treatment standard and should not be relied on for TSS removal, but does help as a pretreatment practice.

Debris collected from some streets and parking lots (e.g., LUHPPLs) may be regulated as a hazardous waste~~ and~~. For these cases, debris must be disposed of in accordance with appropriate practice and applicable regulatory standards. ~~Review~~ Appendix A of the *Rules and Regulations for Composting Facilities and Solid Waste Management Facilities,* which is entitled "Management of Street Sweepings in Rhode Island," ~~for more information.~~should be reviewed. For further information, contact the DEM Office of Waste Management.

G.4.2 Deicing and ~~salt storage~~Salt Storage

Deicing and sanding operations are often necessary for safety during winter storms; however, the materials used create water quality problems. Use deicing chemicals and sand judiciously. Consider the information in Table G-1 when selecting a deicer.

Table G-1 Comparison of Environmental Effects of Common Roadway Deicers

Media	Sodium Chloride ($NaCl$)	Calcium Chloride ($CaCl_2$)	Calcium magnesium acetate (CMA) ($CaMgC_2H_3O_2$)	Sand (SiO_2)
Soils	Cl complexes release heavy metals; Na can ~~break down~~breakdown soil structure and ~~decrease~~reduce permeability	Ca can exchange with heavy metals, increase soil aeration and permeability.	Ca and Mg can exchange with heavy metals.	Gradually will accumulate on soil.
Vegetation	Salt spray/splash can cause leaf scorch and browning or dieback of new plant growth up to 50 feet from road; osmotic stress can result from salt uptake; grass is more tolerant than trees and woody plants.		Little effect.	Accumulates on and around low vegetation.
Groundwater	Mobile Na and Cl ions readily reach groundwater, and concentration levels can temporarily increase in areas of low flow during spring thaws. Ca and Mg can release heavy metals from soil.			No known effect.

Formatted: Font: 8 pt
Formatted: Font: 8 pt
Formatted: Centered
Formatted: Font: 10 pt
Formatted Table
Formatted: Font: 10 pt
Formatted: Centered
Formatted: Font: 10 pt
Formatted: Font: 10 pt
Formatted: Font: 10 pt
Formatted: Font: 10 pt
Formatted: Font: 10 pt
Formatted: Font: 10 pt
Formatted: Font: 10 pt
Formatted: Font: 10 pt
Formatted Table
Formatted: Font: 10 pt

Media	Sodium Chloride ($NaCl$)	Calcium Chloride ($CaCl_2$)	Calcium magnesium acetate (CMA) ($CaMgC_2H_3O_2$)	Sand (SiO_2)
Surface Water	Can cause density stratification in small lakes having closed basins, potentially leading to anoxia in lake bottoms; often contain nitrogen, phosphorus, and trace metals as impurities, often in concentrations greater than 5 ppm.		Depletes dissolved oxygen in small lakes and streams when degrading.	Accumulated sand alters stream geometry and habitat
Aquatic Biota	Little effect in large or flowing bodies at current road salting amounts; small streams that are end points for runoff can receive harmful concentrations of Cl; Cl from NaCl generally not toxic until it reaches levels of 1,000-36,000 ppm.		Can cause oxygen depletion.	Accumulation of particles to stream bottoms degrades habitat, clogs gills.

Source: Adapted from Ohrel, 2000

Sand and deicing chemicals should be stored under cover so as to prevent their exposure to stormwater; the DEM Groundwater Quality Rules require that deicer materials be covered in areas where the groundwater is classified GAA or GA. Table G-2 provides recommendations appropriate for storage and use of deicers. Storage of these materials may be regulated as an industrial activity. Contact DEM's Stormwater Program in the Office of Water Resources for further information.

Table G-2 Recommendations to Reduce Deicer Impacts

Activity	Recommendation
Storage	• Salt storage piles should be completely covered, ideally by a roof, and at a minimum, by a weighted tarp, and stored on impervious surfaces. The DEM Groundwater Quality Rules require that deicer materials be covered in areas where the groundwater is classified GAA or GA. • Runoff should be contained in appropriate areas. • Spills should be cleaned up after loading operations. The material may be directed to a sand pile or returned to salt piles. • Avoid storage in drinking water supply areas, water supply aquifer recharge areas, and public wellhead protection areas.
Application	• Application rate of deicing materials should be tailored to road conditions (i.e., high versus low volume roads). • Trucks should be equipped with sensors that automatically control the deicer spread rate. • Drivers and handlers of salt and other deicers should receive

Formatted: Centered
Formatted: Font: 10 pt
Formatted Table
Formatted: Font: 10 pt
Formatted: Font: 10 pt
Formatted: Centered
Formatted: Font: 10 pt
Formatted: Font: 10 pt
Formatted: Font: 10 pt
Formatted: Font: 8 pt
Formatted: Font: 8 pt
Formatted Table
Formatted: Font: 11 pt
Formatted: Font: 11 pt
Formatted Table
Formatted: Font: 10 pt

Activity	Recommendation
	training to improve efficiency, reduce losses, and raise awareness of environmental impacts.
Other	• Identify ecosystems such as wetlands that may be sensitive to salt. • Use calcium chloride and CMA in sensitive ecosystem areas. • To avoid over-application and excessive expense, choose deicing agents that perform most efficiently according to pavement temperature. • Monitor the deicer market for new products and technology.

Source: Adapted from Ohrel, 2000.

G.4.3 Snow ~~d~~Disposal

Improper snow disposal can be a threat to public health and the environment. Disposal should consider site selection, site preparation and maintenance, and emergency snow disposal locations and procedures. Refer to DEM's Snow Disposal Guidance for more details on these topics, which are summarized below.

G.4.3.1 Site Selection

The key to selecting effective snow disposal sites is to locate them adjacent to or on pervious surfaces in upland areas away from water resources and wells. At these locations, snow meltwater can filter in to the soil, leaving behind sand and debris, which can be removed in the springtime. When selecting a site for snow disposal, adhere to the following guidelines:

- Avoid dumping snow into any waterbody, including rivers, reservoirs, ponds, lakes, wetlands, bays, or the ocean. In addition to water quality impacts and flooding, snow disposed of in open water can cause navigational hazards when it freezes.
- Do not dump snow within a Wellhead Protection Area (WHPA) of a public water supply well, or within 200 feet of a private well, where road salt may contaminate water supplies.
- Avoid dumping snow in sanitary landfills and gravel pits. Snow meltwater will create more contaminated leachate in landfills posing a greater risk to groundwater. In gravel pits, there is little opportunity for pollutants to be filtered out of the meltwater, because groundwater is close to the land surface.
- Avoid disposing of snow on top of storm drain catch basins or in stormwater drainage swales or ditches. Snow combined with sand and debris may block a storm drainage system, causing localized flooding. In addition, a high volume of sand, sediment, and litter released from melting

Formatted Table
Formatted: Font: 11 pt
Formatted Table
Formatted Table
Formatted: Font: 10 pt

snow may be quickly transported through the drainage system into surface water.

G.4.3.2 Site Selection Procedures

It is important that the municipal Department of ~~public works~~Public Works or Highway Department, and other appropriate municipal offices work together to select appropriate snow disposal sites. The following steps should be taken:

- Estimate how much snow disposal capacity is needed for the season so that an adequate number of disposal sites can be selected and prepared~~.~~;
- Identify sites that could potentially be used for snow disposal such as municipal open space (e.g., parking lots or parks~~).~~);
- Sites located in upland locations that are not likely to impact sensitive environmental resources should be selected first~~.~~; and
- If more storage space is needed, prioritize the sites with the least environmental impact (using the site selection criteria and the online Environmental Resource Map as a guide).

Environmental Resource Map

An interactive map containing a wide variety of GIS data layers of interest to local planning or zoning board members, consultants, or anyone else needing a general mapping of soils, wetlands, land use patterns, regulatory overlay districts and other environmental information can be accessed via the internet at the following address: http://www.state.ri.us/dem/maps/index.htm.

This interactive map can be used to identify publicly owned open spaces and approximate locations of sensitive environmental resources (locations should be field verified where possible).

G.4.3.3 Site Preparation and Maintenance

In addition to carefully selecting disposal sites before the winter begins, it is important to prepare and maintain these sites to maximize their effectiveness. The following maintenance measures should be undertaken for all snow disposal sites:

- A silt fence or equivalent barrier should be placed securely on the down-gradient side of the snow disposal site~~.~~;
- To filter pollutants out of the meltwater, a 50-foot vegetative buffer strip should be maintained during the growth season between the disposal site and adjacent waterbodies~~.~~;
- Debris should be cleared from the site prior to using the site for snow disposal~~.~~; and
- Debris should be cleared from the site and properly disposed of at the end of the snow season.

Formatted: No widow/orphan control, Don't keep with next

Formatted: No widow/orphan control

Formatted Table

Formatted: Font: 10 pt

G.4.3.4 Emergency Snow Disposal

Under normal winter conditions, storage, and disposal of snow should be done exclusively in upland areas, not in or adjacent to waterbodies or wetlands. However, under extraordinary conditions when upland snow storage options are exhausted, it may be necessary to dispose of snow near or in certain waterbodies. The following guidance does not constitute a Clean Water Act permit for such disposal. However, in an emergency situation, DEM is unlikely to pursue an enforcement action for snow disposal by governmental entities into or near certain waters if conducted in accordance with the conditions identified below.

As mentioned earlier, it is important to estimate the amount of snow disposal capacity you will need so that an adequate number of upland disposal sites can be selected and prepared. If despite your planning, designated upland disposal sites have been exhausted, snow may be disposed of at other locations that meet the criteria in Section G.4.3.2.

Under extraordinary conditions, when all upland snow disposal options are exhausted, disposal of snow that is not obviously contaminated with road salt, sand, and other pollutants may be allowed near (within 50 feet of) or in certain waterbodies under certain conditions. In these dire situations, notify the DEM – Office of Water Resources, RIPDES Program at 222-4700 (or 222-3070 after normal business hours) before disposing of snow in a waterbody. If upland disposal is not available, and snow needs to be removed/relocated for safety reasons, then as a last resort waterways may be used in accordance with the following conditions:

- Dispose of snow in open water with adequate flow and mixing to prevent ice dams from forming~~.~~;
- Do not dispose of snow in coastal or freshwater wetlands, eelgrass beds, vegetated shallows, vernal pools, shellfish beds, mudflats, outstanding resource waters, drinking water reservoirs and their tributaries, Wellhead Protection Areas (WHPAs), or other areas designed by the State as being environmentally sensitive;
- In coastal communities, preference should be given to disposal in salt water if it is available~~.~~;
- Do not dispose of snow where trucks may cause shoreline damage or streambank damage or erosion~~.~~; and
- Consult with appropriate municipal officials to ensure that snow disposal in water complies with local ordinances and bylaws.

G.4.4 Driveway and Parking Lot Sealants

Driveway and parking lot sealants are a major source of polycyclic aromatic hydrocarbons (PAHs) in our environment. There are two types of sealant: asphalt based and coal-tar based. Both types of sealant contain PAHs, but the coal-tar based sealants have a far higher concentration of PAHs (as much as 70 times higher than

Formatted: No widow/orphan control, Don't keep with next

Formatted: No widow/orphan control

Formatted Table

Formatted: Font: 10 pt

asphalt based). As the sealants wear down, small particles of sealant are washed off by stormwater into surface waters. PAHs have been found to be toxic to aquatic life, with bottom dwelling organisms most at risk since PAHs tend to attach to sediment rather than dissolve in water. Also, in recognition of the human health effects of PAHs, DEM has adopted the US EPA water column human health criteria for PAHs in the DEM Water Quality Regulations. Because of the high concentrations of PAHs in coal-tar based sealants, DEM recommends that coal-tar based sealants not be used. For more information, see: US Geological Survey Fact Sheet 2005-3147, "Parking Lot Sealcoat: A Major Source of Polycyclic Aromatic Hydrocarbons (PAHs) in Urban and Suburban Environments."

G.5 Hazardous Materials Containment

As applicable, project proponents must provide a completed Stormwater Pollution Prevention Plan in accordance with the Rhode Island Pollution Discharge Elimination System Regulations. At a minimum, the following practices should be incorporated as part of site design:

- Site designs must incorporate adequate indoor storage of hazardous materials as the primary method for preventing problems related to stormwater.;
- Diversion through devices such as curbing and berms should be incorporated wherever stormwater has the potential to runoff into hazardous materials storage areas.; and
- Secondary containment must be included wherever spills might occur (e.g., fueling and hazardous materials transfer and loading areas). Oil/grit separators and other manufactured treatment devices may temporarily contain certain spills and contaminated stormwater. However, these devices should be used as backup for tighter containment practices.

G.6 Septic System Management

Approximately one-third of Rhode Islanders use some form of onsite wastewater treatment system (i.e., septic system, cesspool, etc.). When septic systems fail, they may become a major source of pollution to surface and groundwater. Discharge from failed systems is often carried to surface water via stormwater runoff. Stormwater management plans must discuss appropriate operation and management for all onsite wastewater treatment systems (OWTSs) on the project site. Use of regular inspections in accordance with the procedures of *Septic System Checkup: The Rhode Island Manual for Inspections* is recommended.

G.7 Lawn, Garden, and Landscape Management

Lawns are a significant feature of urban landscapes. Estimates of turf and lawn coverage in the United States are as high as 30 million acres, which, if lawns were classified as a crop, would rank as the fifth largest in the country after corn, soybeans, wheat, and hay (Swann and Schueler, 2000). This large area of managed landscape has the potential to contribute to urban runoff pollution due to overfertilization,

Formatted: Font: 8 pt

Formatted Table

Formatted: Font: 10 pt

overwatering, overapplication of pesticides, and direct disposal of lawn clippings, leaves, and trimmings. Also, erosion from bare patches of poorly managed lawns contribute sediment to watercourses, and disposal of lawn clippings in landfills can reduce the capacity of these facilities to handle other types of waste.

The following standards for grounds management must be incorporated into stormwater management plans:

Lawn conversion - Grasses require more water and attention that~~n~~ alternative groundcovers, flowers, shrubs, or trees. Alternatives to turf are especially recommended for problem areas such as lawn edges, frost pockets, shady spots, steep slopes, and soggy areas. Vegetation that is best suited to the local conditions should be selected.

Soil building - Grounds operation and maintenance should incorporate soil evaluation every 1 to 3 years to determine suitability for supporting a lawn, and to determine how to optimize growing conditions. Consider testing soil characteristics such as pH, fertility, compaction, texture, and earthworm content.

Grass selection - Grass seed is available in a wide range of cultivated varieties, so homeowners, landscapers, and grounds managers are able to choose the grass type that grows well in their particular climate, matches site conditions, and is consistent with the property owner's desired level of maintenance. When choosing ground cover, consideration should be given to seasonal variations in rainfall and temperature. Table G-3 lists turfgrass types and their level of tolerance to drought:

Table G-3 Drought Tolerance of Turfgrass Types

Turfgrass Type	Drought Tolerance
Fine-leaved Fescues	High
Tall Fescue	↓
Kentucky Bluegrass	
Perennial Ryegrass	
Bentgrasses	Low

Mowing and thatch management - To prevent insects and weed problems, property owners should mow high, mow frequently, and keep mower blades sharp. Lawns should not be cut shorter than 2 to 3 inches, because weeds can grow more easily in short grasses. Grass can be cut lower in the spring and fall to stimulate root growth, but not shorter than 1 ½ inches.

Fertilization - If fertilizing is desired, consider the following points:

- Most lawns require little or no fertilizer to remain healthy. Fertilize no more than twice a year - once in May-June, and once in September-October~~.~~;

Formatted: Font: 8 pt
Formatted: Font: 11 pt
Formatted: Font: 11 pt
Formatted: Font: 11 pt
Formatted: Heading 5 Char,5-SWManual Char, Not Highlight
Formatted: Font: 8 pt
Formatted Table
Formatted: Font: 10 pt

- Fertilizers are rated on their labeling by three numbers (e.g., 10-10-10 or 12-4-8), which refer to their Nitrogen (N) – Phosphorus (P) – Potassium (K) concentrations. Fertilize at a rate of no more than ½ pound of nitrogen per 1000 square feet, which can be determined by dividing 50 by the percentage of nitrogen in the fertilizer.;
- Apply fertilizer carefully to avoid spreading on impervious surfaces such as paved walkways, patios, driveways, etc., where the nutrient can be easily washed into stormdrains or directly into surface waters.;
- To encourage more complete uptake, use slow-release fertilizers that is those that contain 50 percent or more water-insoluble nitrogen (WIN).);
- Grass blades retain 30-40 percent of nutrients applied in fertilizers. Reduce fertilizer applications by 30 percent, or eliminate the spring application of fertilizer and leave clippings on the lawn where they will degrade and release stored nutrients back to the soil.; and
- Fertilizer should not be applied when rain is expected. Not only does the rain decrease fertilizer effectiveness, it also increases the risk of surface and ground water contamination.

Weed management - A property owner must decide how many weeds can be tolerated before action is taken to eradicate them. To the extent practicable, weeds should be dug or pulled out. If patches of weeds are present, they can be covered for a few days with a black plastic sheet; a technique called solarization. Solarization kills the weeds while leaving the grass intact. If weeds blanket a large enough area, the patch can be covered with clear plastic for several weeks, effectively "cooking" the weeds and their seeds. The bare area left behind after weeding should be reseeded to prevent weeds from growing back. As a last resort, homeowners can use chemical herbicides to spot-treat weeds.

Pest management -- Effective pest management begins with maintenance of a healthy, vigorous lawn that is naturally disease resistant. Property owners should monitor plants for obvious damage and check for the presence of pest organisms. Learn to distinguish beneficial insects and arachnids, such as green lacewings, ladybugs, and most spiders, from ones that will damage plants.

When damage is detected or when harmful organisms are present, property owners should determine the level of damage the plant is able to tolerate. No action should be taken if the plant can maintain growth and fertility. If controls are needed, there are a variety of low-impact pest management controls and practices to choose from, including the following:

- Visible insects can be removed by hand (with gloves or tweezers) and placed in soapy water or vegetable oil. Alternatively, insects can be sprayed off a plant with water, or in some cases vacuumed off of larger plants.;
- Store-bought traps, such as species-specific, pheromone-based traps or colored sticky cards, can be used.;

Formatted: No widow/orphan control

Formatted: Font: 8 pt

Formatted: Font: 8 pt

Formatted Table

Formatted: Font: 10 pt

- Sprinkling the ground surface with abrasive diatomaceous earth can prevent infestations by soft-bodied insects and slugs. Slugs can also be trapped by falling or crawling into small cups set in the ground flush with the surface and filled with beer~~.~~;
- In cases where microscopic parasites, such as bacteria and fungi, are causing damage to plants, the affected plant material can be removed and disposed of. (Pruning equipment should be disinfected with bleach to prevent spreading the disease organism~~.)~~);
- Small mammals and birds can be excluded using fences, netting, tree trunk guards, and, as a last resort, trapping. (In some areas trapping is illegal. Property owners should check local codes if this type of action is desired~~.)~~); and
- Property owners can ~~promote~~encourage/attract beneficial organisms, such as bats, birds, green lacewings, ladybugs, praying mantis, ground beetles, parasitic nematodes, trichogramma wasps, seedhead weevils, and spiders that prey on detrimental pest species. These desirable organisms can be introduced directly or can be attracted to the area by providing food and/or habitat.

If chemical pesticides are used, property owners should try to select the least toxic, water soluble, and volatile pesticides possible. All selected pesticides should be screened for their potential to harm water resources. Although organophosphate pesticides, such as diazinon and chlorpyrifos, are popular because they target a broad range of pests and are less expensive than newer, less toxic pesticides, they rank among the worst killers of wildlife, and often pose the greatest health risk. Synthetic pyrethroids are more selective, and typically much less toxic than organophosphates, yet they can harm beneficial insects. When possible, pesticides that pose the least risk to human health and the environment should be chosen. A list of popular pesticides, along with their uses, their toxicity to humans and wildlife, EPA's toxicity rating, and alternatives to the listed chemicals, is available from *The Audubon Guide to Home Pesticides*, (http://www.audubon.org/bird/pesticides/).

Sensible irrigation - Most New England lawns will survive without irrigation. Grasses will normally go dormant in warm, dry periods (June-September) and resume growth when moister is more plentiful. However, if watering is desired, consider the following points:

Established lawns need no more than one inch of water per week (including precipitation) to prevent dormancy in dry periods. Watering at this rate should wet soil to approximately 4-6 inches and will encourage analogous root growth. If possible, use timers to water before 9:00 a.m., preferably in the early morning to avoid evaporative loss.

Use drought~~-~~resistant grasses (see "grass selection" above) and cut grass at 2-3 inches to encourage deeper rooting and heartier lawns.

Formatted: No widow/orphan control

Formatted: Font: 8 pt

Formatted: No widow/orphan control

Formatted: No widow/orphan control

Formatted Table

Formatted: Font: 10 pt

APPENDIX H: ASSORTED DESIGN TOOLS

Appendix H provides additional information to help designers with the incorporation of stormwater BMPs at their site, including approved testing requirements (e.g., soils testing for infiltration) and miscellaneous design details.

H.1 Infiltration, Filter, and Dry Swale Soil Testing Requirements

The following was adapted from the Massachusetts Stormwater ~~Handbook~~Manual, Volume 3 (2008).

H.1.1 General Notes Pertinent to All Testing

1. For infiltration practices and infiltrating permeable paving practices, a minimum field infiltration rate ~~(f_c)~~ of 0.5 inches per hour is required; areas yielding a lower rate preclude these practices. ~~If~~For infiltration practices, if the minimum f_c exceeds ~~two~~8.3 inches per hour, ~~half of~~ the WQ_v must be treated by ~~an~~a separate upstream BMP ~~that does not allow infiltration.~~. For filtering and dry swale practices, no minimum infiltration rate is required if these facilities are designed with a "day-lighting" underdrain system; otherwise, these facilities require a 0.5 inch per hour rate.
2. Number of required ~~borings~~tests is based on the size of the proposed facility~~. Testing is done in two phases, (~~ (Table H-1~~) Initial Feasibility, and (2) Concept Design Testing.~~).
3. Testing is to be conducted by a qualified professional. This professional shall be a ~~certified~~DEM-licensed Class IV ~~Soil Evaluator~~ soil evaluator or RI-registered ~~in Rhode Island~~PE.

H.1.1.1 Initial Feasibility Testing

Feasibility testing ~~is~~should be conducted to determine whether full-scale testing is necessary~~,~~ and is meant to ~~reduce~~ screen unsuitable sites~~,~~ and reduce testing costs. A soil boring is not required at this stage.

Initial testing ~~involves~~could involve either one field test per facility, regardless of type or size, or previous testing data, such as the following:

- Septic percolation testing on-site, within 200 feet of the proposed BMP location, and on the same contour [can establish initial rate, water table and/or depth to bedrock];
- Previous written geotechnical reporting on the site location as prepared by a qualified geotechnical consultant; and
- NRCS Soil Mapping *showing an unsuitable soil group* such as a hydrologic group "D" soil in a low-lying area.

Formatted: Condensed by 0.1 pt

Formatted: Condensed by 0.1 pt

Formatted Table

Formatted: Font: 10 pt

If the results of initial feasibility testing as determined by a qualified professional show that an infiltration rate of greater than 0.5 inches per hour is probable, then the number of ~~concept~~ *design test* pits shall be per the following table. An encased soil boring may be substituted for a test pit, if desired.

Table H-1 Infiltration Testing Summary

Type of Facility	~~**Initial Feasibility Testing**~~	~~**Concept**~~ **Design Testing** ~~**(initial testing yields a rate greater than 0.5 in/hr)**~~	~~**Concept Design Testing (initial testing yields a rate lower than 0.5 in/hr)**~~
Infiltration Practice*/Infiltrating Permeable Pavement Practices	~~1 field percolation test, test pit not required~~	1 infiltration test and ~~3~~1 test pit~~s~~ per ~~200 ft of trench or~~ 5,000 ft^2 ~~of basin area~~	~~not acceptable practice~~
Filter Practice***	~~1 field percolation test, test pit not required~~	1 infiltration test and 1 test pit per 5,000 ft^2 ~~of filter area~~ (no underdrains required**) if infiltration rate > 0.5 in/hr***)	~~underdrains required~~
Dry Swale***	~~1 field percolation test, test pit not required~~	1 infiltration test and 1 test pit per ~~200~~1,000 ft of dry swale (no underdrains required**) if infiltration rate > 0.5 in/hr ***)	~~underdrains required~~

**For use with residential rooftop runoff, testing requirements are reduced to 1 infiltration test and 1 test pit per 5 lots assuming consistent terrain and NRCS soil series. If terrain and soil series are not consistent, then requirements increase to 1 infiltration test and 1 test pit per 1 lot.
**When proposed as a treatment/infiltration system. If proposed as strictly a filtration practice, infiltration testing analysis not strictly required but a test pit or boring is required to verify depth to seasonal high groundwater or bedrock.
**~~u~~*Underdrain installation still strongly suggested.

H.1.1.2 Documentation

Infiltration testing data shall be documented, which shall also include a description of the infiltration testing method, if completed. This is to ensure that the tester understands the procedure.

Formatted Table

Formatted Table

Formatted: Font: 10 pt

H.1.2 Test Pit/Boring Requirements

1. Excavate a test pit or dig a standard soil boring to a depth of 4 ft below the proposed facility bottom.
2. Determine depth to groundwater table (if within 4 ft of proposed bottom) upon initial digging or drilling, and again 24 hours later when conducting soil borings or drilling wells. ~~Rhode Island~~A DEM-licensed Class IV ~~Soil Evaluators~~soil evaluator or RI-registered PE may establish seasonal high groundwater depth in test pits based on redoximorphic features and need not revisit the site 24 hours later.
3. Conduct Standard Penetration Testing (SPT) every 2 ft to a depth of 4 ft below the facility bottom when conducting soil borings.
4. Determine USDA textures at the proposed bottom and 4 ft below the bottom of the BMP.
5. Determine depth to bedrock (if within 4 ft of proposed bottom).
6. The soil description should include all soil horizons.
7. The location of the test pit or boring shall correspond to the BMP location; test pit/soil boring stakes are to be left in the field for inspection purposes and shall be clearly labeled as such.

Formatted: Condensed by 0.1 pt

H.1.3 Field Infiltration Testing Requirements

Field test methods to assess saturated hydraulic conductivity must simulate the "field-saturated" condition and must be conducted at the depth of the bottom of the proposed infiltrating practice. Design infiltration rates shall be determined by using a factor of safety of 2 from the field-derived value. See ASTM D5126-90 (2004) Standard Guide for Comparison of Field Methods for Determining Hydraulic Conductivity in the Vadose Zone. The saturated hydraulic conductivity analysis must be conducted by the ~~RI-certified~~DEM-licensed Class IV ~~Soil Evaluator.~~soil evaluator or RI-registered PE. Acceptable tests include:

Formatted: Condensed by 0.1 pt

- Guelph permeameter - ASTM D5126-90 Method
- Falling head permeameter – ASTM D5126-90 Method
- Double ring permeameter or infiltrometer - ASTM D3385-03[5], D5093-02[6], D5126-90 Methods
- Amoozemeter or Amoozegar permeameter – Amoozegar 1992

H.1.4 Laboratory Testing

Grain-size sieve analysis and hydrometer tests where appropriate may be used to determine USDA soils classification and textural analysis. Visual field inspection by a qualified professional may also be used, provided it is documented. *The use of lab testing to establish infiltration rates is prohibited.*

[5] ASTM D3385-03 Standard Test Method for Infiltration Rate of Soils in Field Using Double-Ring Infiltrometer.
[6] ASTM D5093-02 Standard Test Method for Field Measurement of Infiltration Rate Using a Double-Ring Infiltrometer with a Sealed-Inner Ring.

Formatted Table

Formatted: Font: 10 pt

H.1.5 Bioretention Testing

All areas tested for application of bioretention facilities shall be back-filled with a suitable sandy loam planting media. The borrow source of this media, which may be the same or different from the bioretention area location itself, must be tested as follows:

If the borrow area is virgin, undisturbed soil, one test is required per 5,000 ft^2 of borrow area; the test consists of "grab" samples at one foot depth intervals to the bottom of the borrow area. All samples at the testing location are then mixed, and the resulting sample is then lab-tested to meet the following criteria:

1. USDA minimum textural analysis requirements: A textural analysis is required from the site stockpiled topsoil. If topsoil is imported, then a texture analysis shall be performed for each location where the top soil was excavated.
2. Minimum requirements:

Sand	85-88%
Silt	8 - 12%
Clay	0 - 2%
Organics	3 - 5% in form of leaf compost

3. The soil shall be a uniform mix, free of stones, stumps, roots or other similar objects larger than one inch.
4. Consult the bioretention construction specifications (Appendix F) for further guidance on preparing the soil for a bioretention area.

H.2 Miscellaneous BMP Details

This section contains miscellaneous design schematics for compliance with performance criteria, including:

H.2.1 Low-flow Orifice Protection

Outlet control structures typically use orifices of varying sizes to control discharge from certain stormwater BMPs. Low-flow orifices (typically <6" diameter) can easily clog with trash and vegetative debris. Figures H-1 through H-3 illustrate a few examples of protective measures to prevent clogging and keep the BMPs functioning properly.

Formatted Table

Formatted Table

Formatted: Font: 10 pt

Figure H-1 Trash Rack for Low-flow Orifice

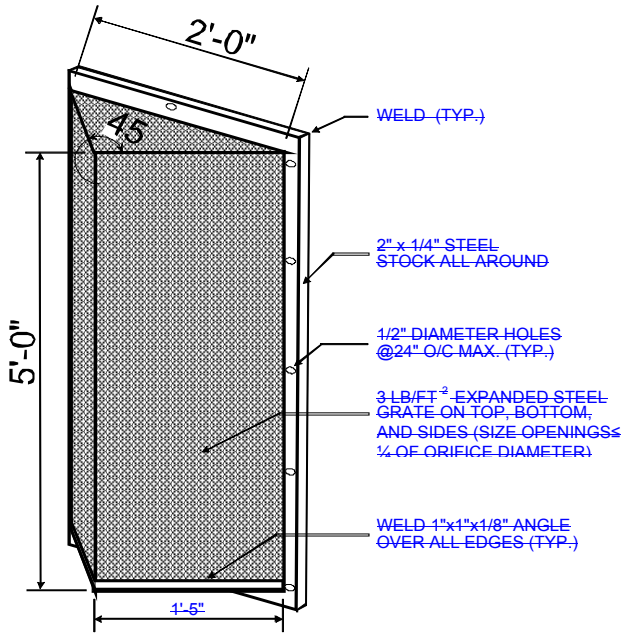

NOTES FOR TRASH RACK

1. TRASH RACK TO BE CENTERED OVER OPENING.
2. STEEL TO CONFORM TO ASTM A-36.
3. ALL SURFACES TO BE COATED WITH ZRC COLD GALVANIZING COMPOUND AFTER WELDING.

Formatted Table

Formatted: Font: 10 pt

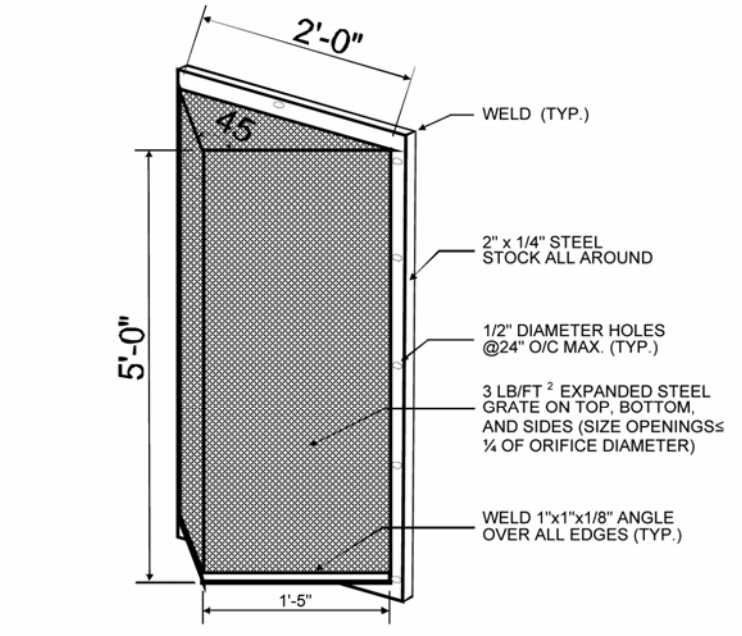

NOTES FOR TRASH RACK

1. TRASH RACK TO BE CENTERED OVER OPENING.
2. STEEL TO CONFORM TO ASTM A-36.
3. ALL SURFACES TO BE COATED WITH ZRC COLD GALVANIZING COMPOUND AFTER WELDING.

Figure H-2 Expanded Trash Rack Protection for Low-flow Orifice

Formatted Table

Formatted: Font: 10 pt

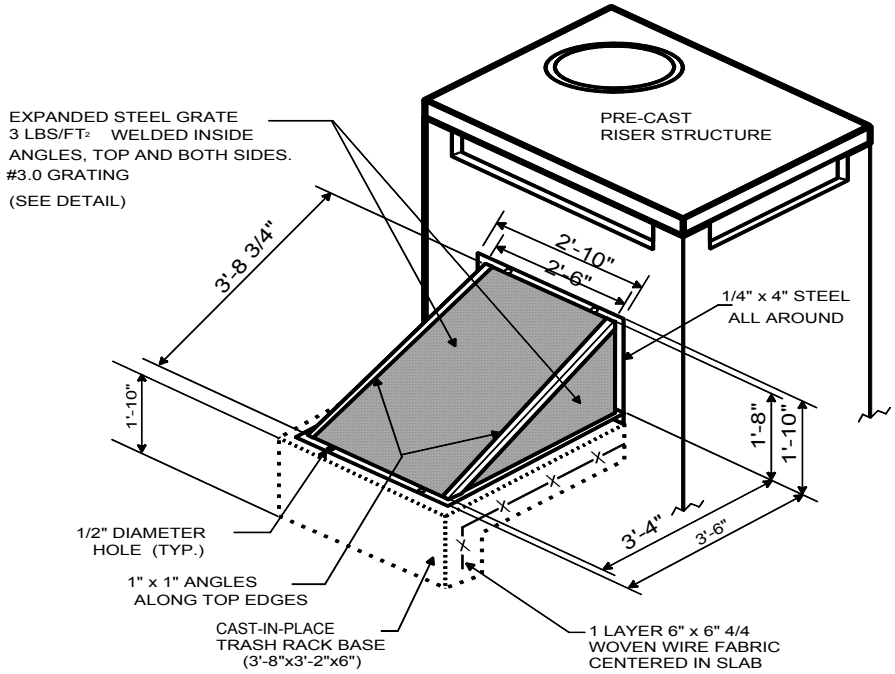

Figure H-3 Internal Control for Orifice Protection

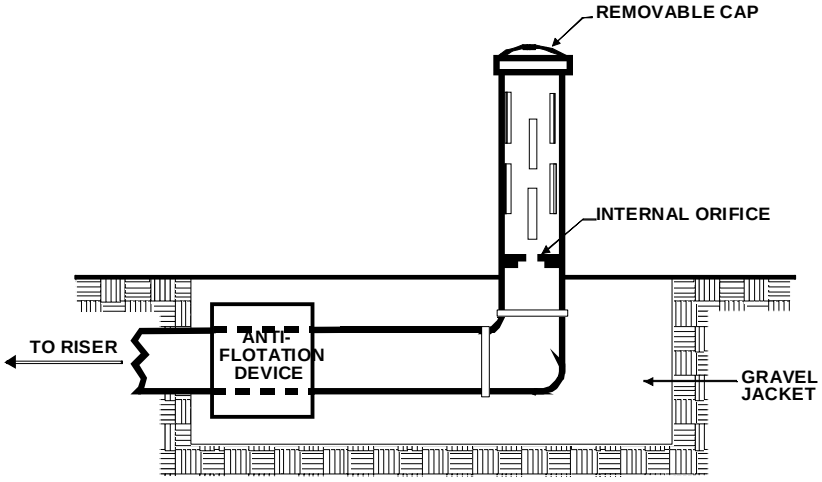

Formatted: Centered

Formatted Table

Formatted: Font: 10 pt

H.2.2 Observation Well/Cleanout

Infiltration and filtering practices require an observation well/cleanout for inspections and maintenance. One example that can be used in a parking lot is the flush-mounted observation well shown below in Figure H-4.

Figure H-4 Observation Well/Cleanout for Infiltration and Filtering Practices

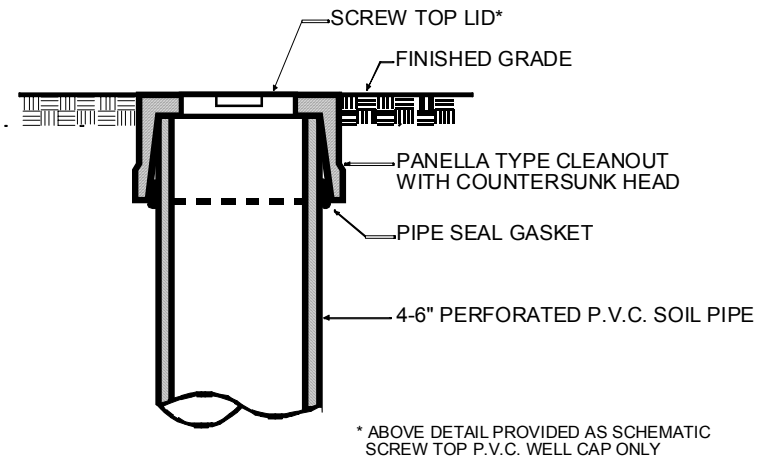

EACH OBSERVATION WELL / CLEANOUT SHALL INCLUDE THE FOLLOWING:

1. FOR AN UNDERGROUND FLUSH MOUNTED OBSERVATION WELL / CLEANOUT, PROVIDE A TUBE MADE OF NON-CORROSIVE MATERIAL, SCHEDULE 40 OR EQUAL, AT LEAST THREE FEET LONG.

2. THE TUBE SHALL HAVE A FACTORY ATTACHED CAST IRON OR HIGH IMPACT PLASTIC COLLAR WITH RIBS TO PREVENT ROTATION WHEN REMOVING SCREW TOP LID. THE SCREW TOP LID SHALL BE CAST IRON OR HIGH IMPACT PLASTIC THAT WILL WITHSTAND ULTRA-VIOLET RAYS.

H.2.3 On-line Versus Off-line

Best management practices can be designed to receive all of the flow from a given area (on-line) or to receive only a portion of the flow (off-line), such as the water quality volume. Off-line BMPs may need to be paired with another practice for volume control, depending on the site characteristics.

Flow diversion structures, also called flow splitters, are designed to deliver flows up to the design water quality flow (WQ_f) or water quality volume (WQ_v) to off-line stormwater treatment practices. Flows in excess of the WQ_f or WQ_v are diverted around the

Formatted Table

Formatted: Font: 10 pt

treatment facility with minimal increase in head at the flow diversion structure to avoid surcharging the treatment facility under higher flow conditions. Flow diversion structures are typically manholes or vaults equipped with weirs, orifices, or pipes to bypass excess runoff. A number of design options exist. An example of an on-line vs. an off-line filtering practice is shown in Figure H-5. Figure H-6 illustrates one example of a flow splitter that may be used to divert low flows to an off-line BMP for treatment or recharge while allowing larger flows to exit via the outflow pipe to a quantity control BMP or perhaps direct discharge to a water body, based on required site criteria. Other equivalent designs that achieve the result of diverting flows in excess of the WQ_f or WQ_v around the treatment facility, including bypasses or overflows located inside the facility, are also acceptable.

The following general procedures are recommended for design of flow diversion structures:

- Locate the top of the weir or overflow structure at the maximum water surface elevation associated with the WQ_f, or the water surface elevation in the treatment practice when the entire WQv is being held, whichever is higher.
- Determine the diversion structure dimensions required to divert flows in excess of the WQ_f using standard equations for a rectangular sharp-crested weir, uniform flow in pipes or channels, or orifice depending on the type of diversion structure.
- Provide sufficient freeboard in the stormwater treatment practice and flow splitter to accommodate flow over the diversion structure.
- Limit the maximum head over the flow diversion structure to avoid surcharging the stormwater treatment practice under high flow conditions. Flow to the stormwater treatment practice at the 100-year water surface elevation should not increase the WQ_f by more than 10 percent.

Design diversion structures to withstand the effects of freezing, frost in foundations, erosion, and flotation due to high water conditions. These structures should be designed to minimize clogging potential and to allow for ease of inspection and maintenance.

Formatted Table

Formatted: Font: 10 pt

Figure H-5 On-line Versus Off-line Schematic

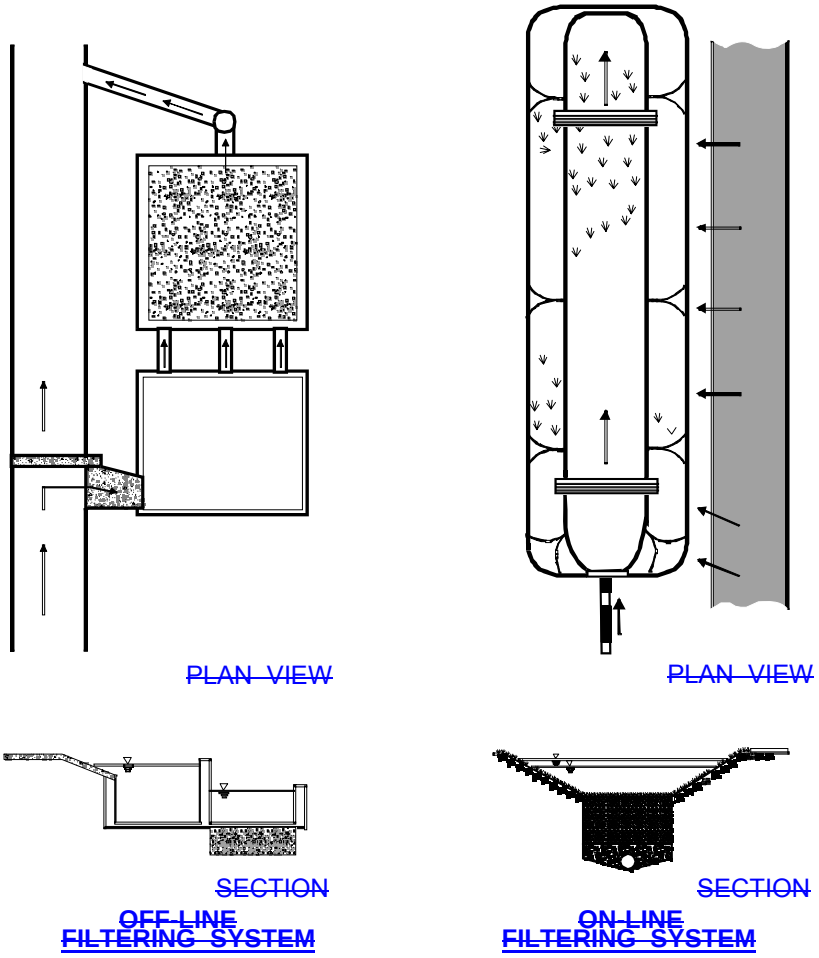

Formatted Table

Formatted: Font: 10 pt

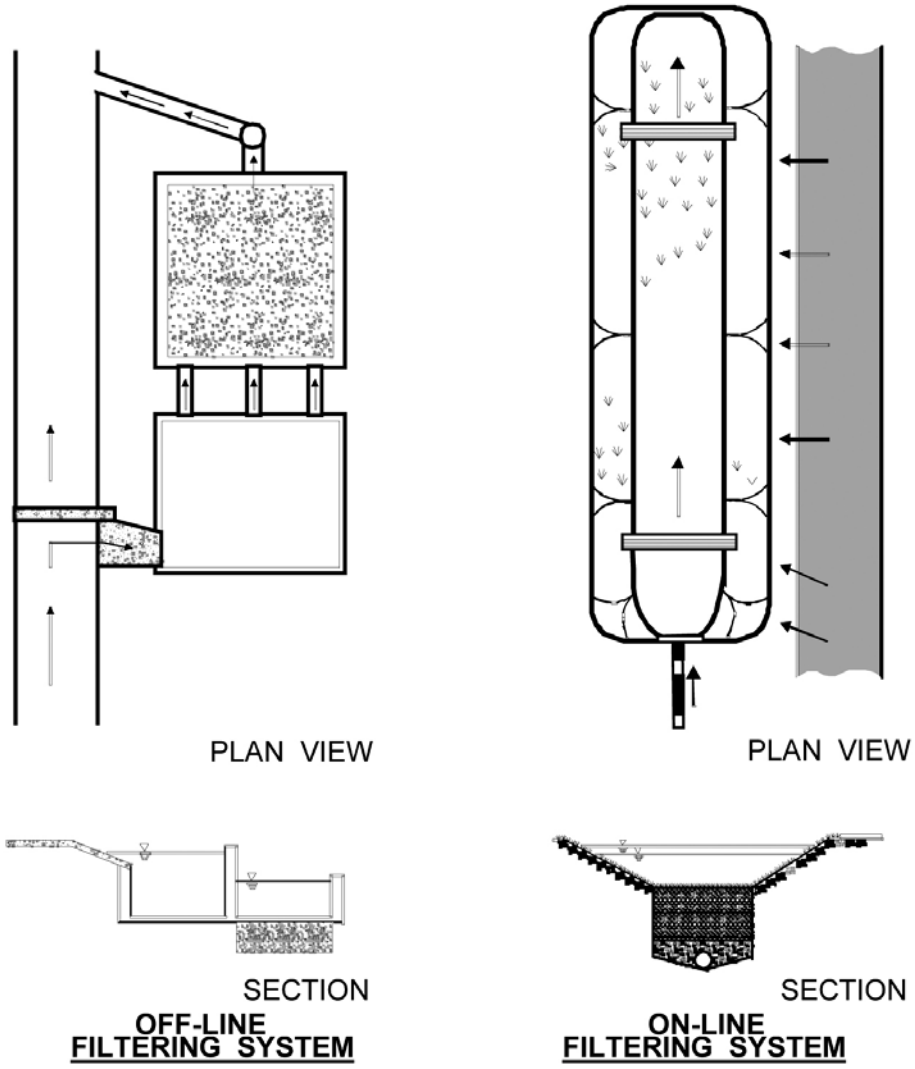

Formatted Table

Formatted: Font: 10 pt

Figure H-6 Flow Splitter Structures

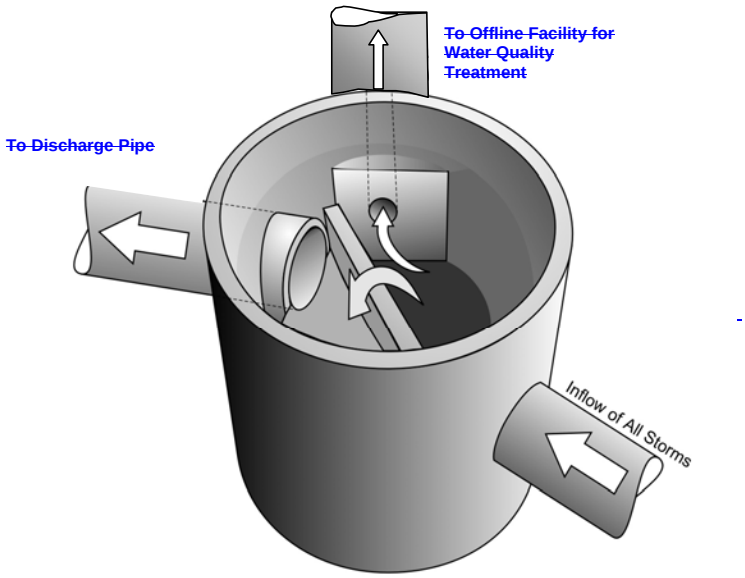

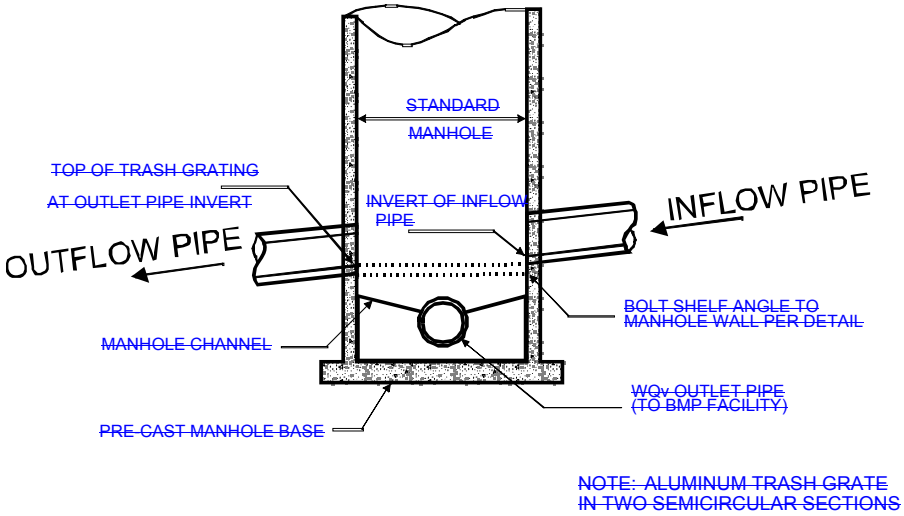

Formatted Table

Formatted: Font: 10 pt

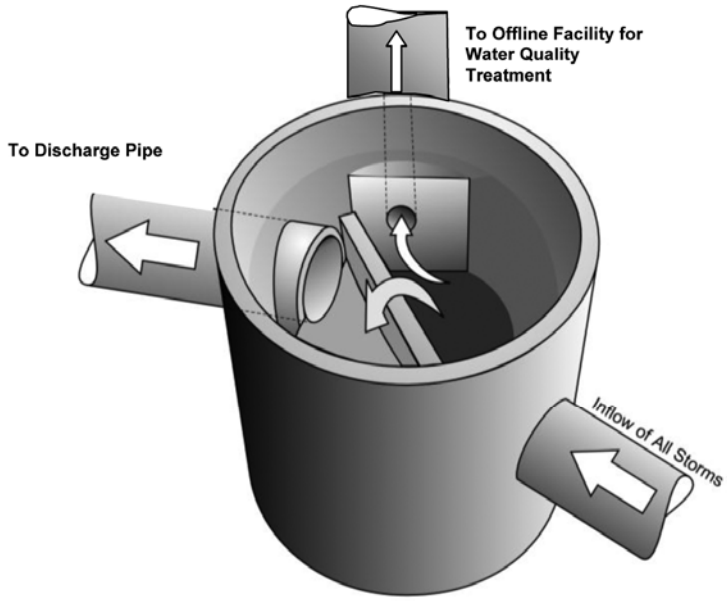

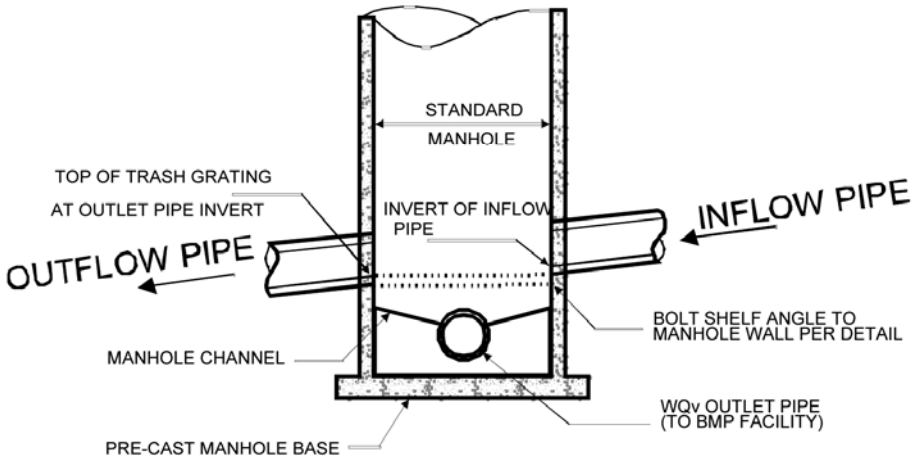

NOTE: ALUMINUM TRASH GRATE
IN TWO SEMICIRCULAR SECTIONS

Formatted Table

Formatted: Font: 10 pt

H.2.4 Level Spreaders

Level spreaders are devices designed to uniformly distribute flow over a large area to prevent erosive flows and promote infiltration. There are several level spreader designs that differ based on the peak rate of inflow, the duration of use, the type of pollutant, and the site conditions. All designs follow the same basic principles: water enters the spreader through overland flow, a pipe, ditch or swale; the flow is distributed throughout a long linear shallow trench or behind a low berm; and then water flows over the berm/ditch uniformly along the entire length. Level spreaders can be used during construction or as a part of post-construction stormwater control. They are particularly useful to diffuse flow through vegetated buffers adjacent to waterbodies, in areas requiring a vegetative filter strip to pretreat runoff, and as a segment of a stormwater treatment series of BMPs where concentrated flow presents design constraints, such as with some filtering practices. One example of a level spreader is illustrated below in Figure H-7.

Required Elements

- A level spreader shall be installed in an undisturbed or finished area.
- The level spreader lip shall be constructed with a maximum slope of 0.1% along its length.
- Runoff entering a level spreader must not contain significant amounts of sediment. An upstream sediment removal practice may be required in addition to the level spreader.

Design Guidance

- A level spreader should disperse onto a vegetated slope that has a gradient of less than 10:1 (H:V).
- The lip can be constructed of either stabilized grass for low flows, or timber/concrete for higher flows.
- The length of the level spreader lip is dependent on the volume of water that must be discharged, but the minimum length for the level spreader lip is 6 feet.
- Stormwater flowing over the lip should be limited to a depth of approximately 6 inches and a velocity of 1 fps for the design storm.
- The maximum drainage area for a level spreader should be 2.5 acres for maximum efficiency.

Sample Calculation:

A level spreader is proposed to disperse the runoff from the 1-year storm event, with a peak discharge rate (q) of 5 cfs. Calculate the required length of the level spreader.

Length (L) = peak discharge rate (q) / [maximum velocity (v) * depth (d)]
L = 5 cfs / (1 fps * 0.5 ft) = 10 feet

Formatted Table

Formatted: Font: 10 pt

A level spreader with a 10-foot lip is required for this example.

Figure H-7 Concrete Level Spreader - Profile and Plan Views

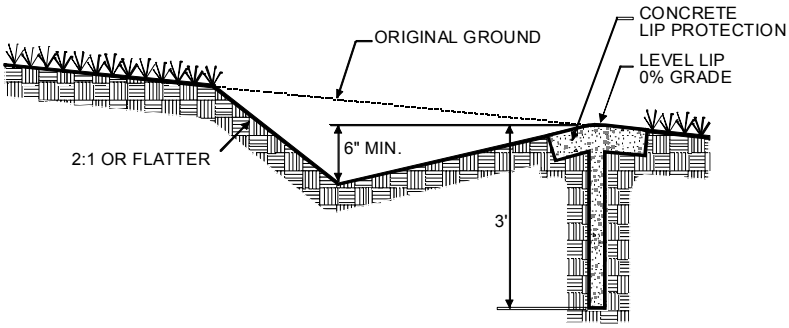

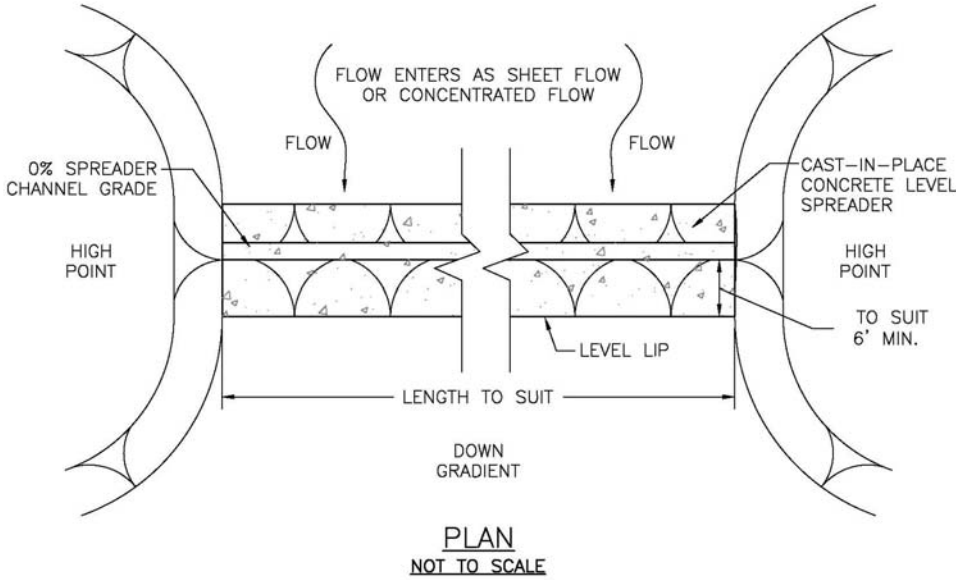

Formatted: Centered, Don't keep with next, Don't keep lines together

Formatted: Centered, Indent: Left: 0", First line: 0"

Formatted Table

Formatted: Font: 10 pt

H.3 Pollutant Loading Analyses

H.3.1 Introduction

On a case by case basis, the permitting agency may require applicants to document that a particular project does not unduly contribute to, or cause, water resource degradation (generally for sensitive resource areas or where an elevated concern for water quality exists) or to document a reduction in pollutant load (generally as a consequence of a TMDL requirement). In these cases, applicants may be required to calculate potential stormwater pollutant loadings for projects for pre-development and post-development conditions.

When such an analysis is required of the applicant, the Simple Method (Schueler, 1987) can be used to demonstrate urban stormwater pollutant loadings. The Simple Method requires estimates of annual rainfall, site percent impervious cover, land use type, and pollutant loading coefficients based on land use.

For a more detailed description of this method refer to Controlling Urban Runoff: A practical manual for planning and designing urban BMPs (Schueler, 1987). Table H-2 provides event mean concentrations (EMCs) in milligrams per liter (mg/L) for typical pollutants of concern associated with stormwater runoff (# col/100ml for bacteria). There may be an interest in calculating the loading rates of other pollutants not listed in this table. If this is necessary, an applicant shall use EMC data from a reliable source, as approved by the permitting agency, based on the land use category. These EMCs must be documented by scientific studies and referenced by the applicant.

The method outlined in this section is most often applied to calculating loadings to surface water bodies. Other pollutant loading methods may be acceptable, provided the applicant submits the methodology and data used along with the reasoning for the chosen method. All information supplied by the applicant will be reviewed by the permitting agency to determine the relevance of the model to the situation.

H.3.2 Overview of the Simple Method

Stormwater pollutant export load (L, in pounds or billion colonies) from a development site can be determined by solving the following equation:

(Eq 1.) $L = [(P)(Pj)(Rv)/12](C)(A)(2.72)$

Where:

- P = rainfall depth (inches)
- Pj = rainfall correction factor
- Rv = runoff coefficient expressing the fraction of rainfall converted to runoff
- C = flow-weighted mean concentration of the pollutant in urban runoff (mg/L)
- A = contributing drainage area of development site (acres)
- 12, and 2.72 are unit conversion factors

Formatted Table

Formatted: Font: 10 pt

For bacteria, the conversion factor is modified, so the loading equation is:

(Eq 1a.) $L = 1.03(10^{-3})[(P)(Pj)(Rv)](C')(A)$

Where:

- P = rainfall depth (inches)
- Pj = rainfall correction factor
- Rv = runoff coefficient expressing the fraction of rainfall converted to runoff
- C' = flow-weighted mean bacteria concentration (#col/100 ml)
- A = contributing drainage area of development site (acres)
- 1.03 is a unit conversion factor

Table H-2 Median EMC Values for Differing Land Use Categories

Pollutant (mg/l)	Land Use Category				
	Residential	Commercial	Industrial	Highways	Undeveloped/Rural[3]
TSS	100[1]	75[1]	120[1]	150[1]	51
TP	0.3	0.2	0.25	0.25	0.11
TN	2.1	2.1	2.1	2.3	1.74
Cu	.005	.096	.002	.001	-
Pb	.012	.018	.026	.035	-
Zn	.073	.059	.112	.051	-
BOD	9.0	11.0	9.0	8.0	3.0
COD	54.5	58.0	58.6	100.0	27.0
Bacteria*	7000	4600	2400	1700	300

Sources:

[1] Caraco (2001); default values from Watershed Treatment Model, from several individual assessments

[2] (shaded) Maestre and Pitt (2005); National Stormwater Quality Database, v 1.1

[3] CDM (2004) Merrimack River Watershed Assessment Study, Screening Level Model

* Bacteria concentration in #col/100 ml.

P (depth of rainfall)

The value of P selected depends on the time interval over which loading estimates are necessary (usually annual rainfall – See Figure H-8).

Appropriate annual rainfall values for a site specific location can be interpolated from Figure H-8 or obtained from the Northeast Regional Climate Center. If a load estimate is desired for a specific design storm (e.g., 10-year 24-hour, Type III storm), the user can supply the relevant value of P derived from Table 3-1. Caution is required as EMCs vary as a function of rainfall amount and intensity and those presented in Table H-2 are median values from a range of storms more representative of long-term loading. If a load is desired from a larger storm such as the 10-year, 24 hour, Type III storm, applicants shall provide appropriate documentation of the source of the EMC used. All rainfall data used in the analysis must be applicable to site location and referenced for review.

Formatted Table

Formatted: Font: 10 pt

Pj (correction factor)
Use a value of 0.9 for Pj. This represents the percentage of annual rainfall that produces runoff. When solving the equation for individual storms, a value of 1.0 should be used for Pj.

Rv (runoff coefficient)
Rv is the measure of site response to rainfall events and is calculated as:

(Eq 2.) $Rv = r/p$

Where:
r = storm runoff (inches)
p = storm rainfall (inches)

The Rv for a site depends on soil type, topography, and vegetative cover. However, for annual pollutant loading assessments, the primary influence on Rv is the degree of watershed imperviousness. The following equation has been empirically derived from the Nationwide Urban Runoff Program studies (USEPA, 1983) and is used to establish a value for Rv.

(Eq 3.) $Rv = 0.05 + 0.009(\%I)$

Where:
%I = the percent of site imperviousness

A value for I can be calculated by summing the areas of all impervious surfaces (e.g., buildings, driveways, roads, parking lots, sidewalks, etc.) and dividing this area by the total contributing drainage area. If more than one land use is present at the site, divide the impervious portion of each land use by its respective total area.

A (drainage area)
The total contributing drainage area (acres) can be obtained from site plans.

C (pollutant concentration)
Choose the appropriate value of C from Table H-2.

Sample calculations:

A 30-acre undeveloped parcel is to be developed into a residential subdivision with the remaining 10 acres converted to a commercial plaza. Assume the commercial land use area has impervious surfaces covering 85% of the area, while the residential subdivision has 35% impervious surfaces. Also assume the entire 30-acre site has all drainage directed to one outlet (into a coastal pond). This site is located in an area that receives approximately 45 inches of precipitation per year, say Providence. What would be the potential annual loading rate of total nitrogen (TN) to the coastal salt pond from this site without the installation of onsite BMPs; compare pre- and post-development scenarios.

Formatted Table

Formatted: Font: 10 pt

Pre-development conditions

Undeveloped site: (Eq.3) Rv = 0.05 + 0.009(%I) = 0.05 + 0.009(0) = 0.05

(Eq.1) L = [(P)(Pj)(Rv)/(12)](C)(A)(2.72); from Table H-2, C = 1.74 mg/l

L = [(45)(0.9)(0.05)/12](1.74)(30)2.72 = ***24.0 lbs TN/year***

Post-development conditions

Residential: (Eq.3) Rv = 0.05 + 0.009(%I) = 0.05 + 0.009(35) = 0.365

(Eq.1) L = [(P)(Pj)(Rv)/(12)](C)(A)(2.72); from Table H-2, C = 2.1 mg/l

L = [(45)(0.9)(0.365)/12](2.1)(20)2.72 = ***140.7 lbs TN/year***

Commercial: (Eq.3) Rv = 0.05 + 0.009(%I) = 0.05 + 0.009(85) = 0.815

(Eq. 1) L = [(P)(Pj)(Rv)/(12)](C)(A)(2.72); from Table H-2, C = 2.1 mg/l

L = [(45)(0.9)(0.815)/12](2.1)(10)2.72 = ***157.1 lbs TN/year***

Total annual nitrogen loading from the developed site = 140.7 + 157.1 = ***297.8 lbs TN/year***

Conclusion: Development of the site results in a net increase of 273.8 lbs of nitrogen (297.8 – 24.0) into the coastal salt pond per year.

Now evaluate the same example except for Bacteria:

Pre-development conditions

Undeveloped site: (Eq.3) Rv = 0.05 + 0.009(%I) = 0.05 + 0.009(0) = 0.05

(Eq 1a.) L = 1.03(10^{-3})[(P)(Pj)(Rv)](C')(A)); from Table H-2, C' = 300 col/100 ml

L = [1.03(10^{-3})(45)(0.9)(0.05)](300)(30) = ***18.8 Billion Colonies/year***

Post-development conditions

Residential: (Eq.3) Rv = 0.05 + 0.009(%I) = 0.05 + 0.009(35) = 0.365

(Eq 1a.) L = 1.03(10^{-3})[(P)(Pj)(Rv)](C')(A)); from Table H-2, C' = 7,000 col/100 ml

Formatted Table

Formatted: Font: 10 pt

L = [1.03(10^{-3})(45)(0.9)(0.365)](7,000)(20) = ***2,131.6 Billion Colonies/year***

Commercial: (Eq.3) Rv = 0.05 + 0.009(%I) = 0.05 + 0.009(85) = 0.815

(Eq 1a.) L = 1.03(10^{-3})[(P)(Pj)(Rv)](C')(A)); from Table H-2, C' = 4,600 col/100 ml

L = [1.03(10^{-3})(45)(0.9)(0.815)](4,600)(10) = ***1,563.9 Billion Colonies/year***

Total annual bacteria loading from the developed site = 2,131.6 + 1563.9 = ***3,695.5 Billion Colonies/year***

Conclusion: Development of the site results in a net increase of ***3,676.7 Billion Colonies/year*** *(3695.5 – 18.8) into the coastal salt pond per year.*

Applicants will frequently need to evaluate the potential pollutant removal effectiveness of stormwater practices when conducting a pollutant loading analysis. To do this, applicants can use the rated pollutant removal effectiveness as listed in Tables H-3 and H-4 as a basis of estimating pollutant removal. These values have been derived from a variety of sources based on actual monitoring data and modified, where appropriate, to reflect the specific design and sizing criteria contained in Chapters Five, Six, and Seven.

In some cases, the pollutant removal rating values use median values from prior monitoring studies when the studies included a significant number of facilities of similar design criteria as those required in this manual. In other cases, the 75th quartile values (or high end) are reported where it is recognized that the prior monitoring was of insufficient sample size or was of practices with design criteria not as robust as those required in this manual. Lastly, in many cases, there is insufficient prior monitoring of practices for some or all of the reported pollutants, but primary pollutant removal mechanisms are similar to other practices; thus, a removal value is assigned, based on general literature values and/or as a policy decision. In addition, most of the design criteria for water quality BMPs incorporate pre-treatment requirements, such as the requirement for a forebay or grass channel prior to infiltration. In these cases, the rated removal efficiency of the practice is for the total system. For example, the gravel WVTS has a rated TSS removal of 86%; this accounts for the TSS removal of both the required forebay and the gravel bed/permanent pool.

In general, where pollutant loading assessments are requested, applicants may use the rated removal values as a basis for estimating pollutant load. However, other pollutant removal estimates may be acceptable, provided the applicant submits the source of these estimates and data used. All information supplied by the applicant will be reviewed by the permitting agency to determine the relevance of the removal estimates to the situation.

Formatted Table

Formatted: Font: 10 pt

Table H-3 Pollutant Removal Efficiency Rating Values for Water Quality BMPs

Water Quality BMPs (those meeting Min. Std 3)		Median Pollutant Removal Efficiency (%)			
		TSS	TP	TN	Bacteria
WVTS	Shallow WVTS	85%[2]	48%[3]	30%[2]	60%[2]
	Gravel WVTS	86%[3]	53%[1]	55%[3]	85%[2]
Infiltration Practices	Infiltration Basin	90%[2]	65%[3]	65%[2]	95%[2]
	Infiltration Trench	90%[2]	65%[3]	65%[2]	95%[2]
	Subsurface Chambers	90%[2]	55%[2]	40%[2]	90%[2]
	Dry Well	90%[2]	55%[2]	40%[2]	90%[2]
	Porous Pavement	90%[1]	40%[1]	40%[2]	95%[2]
Filters	Sand Filter	86%[3]	59%[3]	32%[3]	70%[2]
	Organic Filter	90%[2]	65%[2]	50%[2]	70%[2]
	Bioretention	90%[1]	30%[2]	55%[2]	70%[2]
	Tree Filter	90%[1]	30%[2]	55%[2]	70%[2]
	Green Roof	90%[4]	30%[4]	55%[4]	70%[4]
Open Channels	Dry Swale	90%[1]	30%[2]	55%[2]	70%[2,6]
	Wet Swale	85%[3]	48%[3]	30%[2]	60%[2]

Formatted Table

Formatted: Font: 10 pt

Table H-4 BMP Pollutant Removal Rating Values for Other BMPs

Other BMPs		**Median Pollutant Removal Efficiency (%)**			
		TSS	TP	TN	Bacteria
Pretreatment BMPs	Grass Channel	70%[1,2]	24%[3]	40%[2]	NT
	Sediment Forebay	25%[4]	8%[5]	3%[5]	12%[5]
	Filter Strip	25%[4]	ND	ND	ND
	Deep Sump Catch Basin	25%[4]	NT	NT	NT
	Hydrodynamic Device	25%[1]	NT	NT	NT
	Oil and Grit Separator	25%[4]	NT	NT	NT
Storage BMPs	Dry Extended Detention Basin	50%[2]	20%[2]	25%[2]	35%[2]
	Wet Extended Detention Basin	80%[3]	52%[3]	31%[3]	70%[3]
	Underground Storage Vault[2]	20%[2]	15%[2]	5%[2]	25%[2]

"ND" Specifies No Data
"NT" Specifies No Treatment
References
1 (UNHSC, 2007b)
2 (CWP, 2007)
3 (Fraley-McNeal, et al., 2007)
4 (prescribed value based on general literature values and/or policy decision)
5 (50% of reported values of low end for extended detention basins)
6 Presumed equivalent to bioretention; will require diligent pollutant source control to manage pet wastes in residential areas

Estimating Pollutant Removal of BMPs

Using the rated efficiencies from Tables H-3 and H-4, applicants can reduce post-development loadings to receiving waters when BMPs are designed, installed, and maintained in accordance with the provisions of this manual.

Example Calculation

The 10-acre commercial project (annual TN load = 157.1 #) is designed to be managed by a gravel WVTS.

Formatted Table

Formatted: Font: 10 pt

The load reduced by the BMP is: 157.1 (.55) = 86.4 lbs TN/year.

*The net loading to the bay is: 157.1 – 86.4 = **70.7 lbs TN/year**.*

Estimating Pollutant Removal of BMPs in Series

In some cases, applicants may have one or more BMPs installed in a series as a so-called "treatment train." In these cases, available research has shown that the pollutant removal efficiency of specific BMPs, for specific pollutants, is reduced for subsequent BMPs in the treatment train arrangement. As stormwater migrates through the treatment train, coarser-grained particles are preferentially removed by the prior BMP, leaving progressively finer particles for practices down the line. The result is that for pollutants associated with fine particulates, removal efficiency drops off significantly (e.g., TSS and TP, in particular).

To account for this phenomenon, a widely applied and generally accepted method has been to discount the rated removal efficiency of the second BMP by a factor of between 75% and 50%, with subsequent BMPs being reduced accordingly (see ARC, 2001).

The Georgia Manual Method applies BMP removals as follows:

- 100% of the rated TSS removal efficiency (E_{TSS}) to the first BMP
  - If E_{TSS} > 80% for the first BMP; E for the second BMP = 50% (regardless of the pollutant constituent).
  - IF E_{TSS} <80% for the first BMP; E for the second BMP = 75% (regardless of the pollutant constituent).
- For succeeding BMPs, E is applied at either 50% or 75% depending on the equivalent E_{TSS} for the preceding BMPs (regardless of the pollutant constituent).

This method does not apply to bacteria, where removal is more a function of die-off than settling/attenuation; thus, the full efficiency is applied to subsequent BMPs.

Example Calculation

Using the example from above, the 10-acre commercial site first drains through a grass channel (designed in accordance with the guidance in Chapter Six) prior to a gravel WVTS (designed in accordance with the guidance in Chapter Five).

Removal efficiencies:
Grass channel: E_{TSS} = 70%; E_{TN} = 40%
Gravel WVTS: E_{TSS} = 86%; E_{TN} = 55%

Since treatment train goes from grass channel to gravel WVTS, and E_{TSS} is <80% for the grass channel, reduce the rated TN removal of the second BMP by 25% (E_{TN} = 75% of the rated value). The new net loading reduction can be calculated:

Formatted Table

Formatted: Font: 10 pt

Load reduced by grass channel: 157.1 (.40) = 62.8 lbs/yr;
remaining load = 157.1 – 62.8 = 94.3 lbs TN/year

Load reduced by gravel WVTS: 94.3 [(.75)(.55)] = 38.9 lbs/yr;

The net loading to the bay: 94.3 – 38.9 = ***55.4 lbs TN/year***

Figure H-8 Average Annual Precipitation Values for Rhode Island

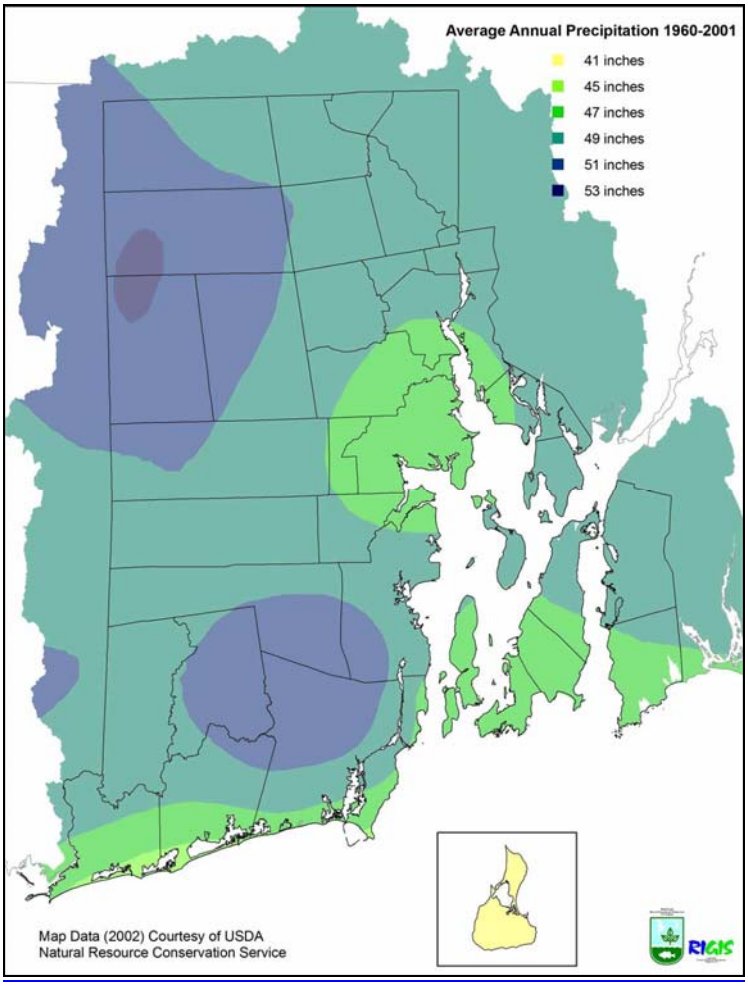

Formatted Table

Formatted: Font: 10 pt

H.4 TR-55 "SHORT-CUT" SIZING TECHNIQUE

This section presents a modified version of the TR-55 short-cut sizing approach. The method was modified by Harrington (1987), for applications where the peak discharge is very small compared with the uncontrolled discharge. This often occurs in the 1-year, 24-hour (Type III) detention sizing.

Using TR-55 guidance (NRCS, 1986), the unit peak discharge (q_u) can be determined based on the curve number and time of concentration. Knowing q_u and T (extended detention time), q_O/q_I (peak outflow discharge/peak inflow discharge) can be estimated from Figure 9.9.

Figure H-10 can also be used to estimate V_s/V_r. When q_O/q_I is <0.1 and off the graph, V_s/V_r can also be calculated using the following equation for Type II/III rainfall distributions:

$$V_s/V_r = 0.682 - 1.43\,(q_O/q_I) + 1.64\,(q_O/q_I)^2 - 0.804\,(q_O/q_I)^3$$

Where: V_s = required storage volume (acre-feet)
V_r = runoff volume (acre-feet)
q_O = peak outflow discharge (cfs)
q_I = peak inflow discharge (cfs)

Figure H-9 Detention Time vs. Discharge Ratios (Source: MDE, 2000)

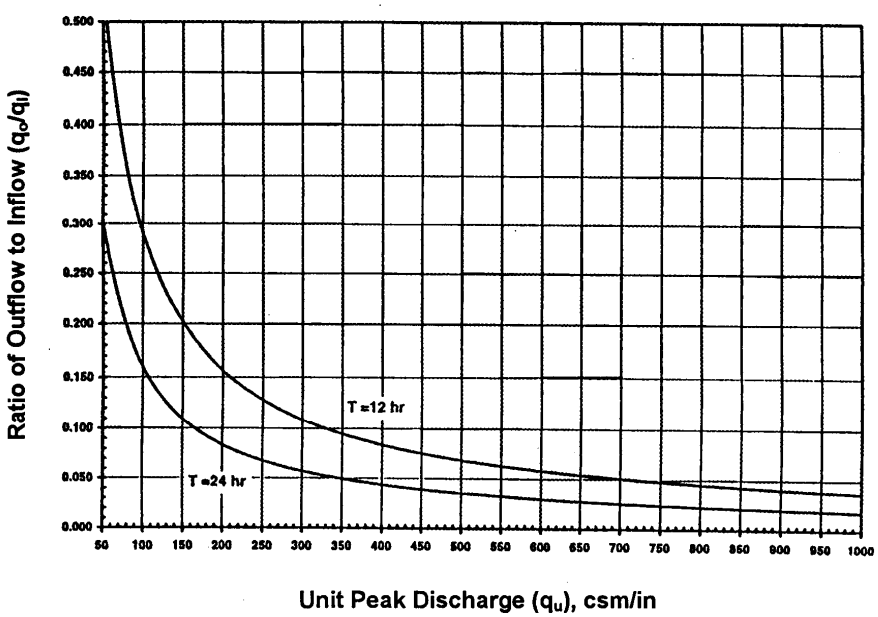

Formatted Table

Formatted: Font: 10 pt

Figure H-10 Approximate Detention Basin Routing For Rainfall Types I, IA, II, and III. (Source: TR-55, 1986)

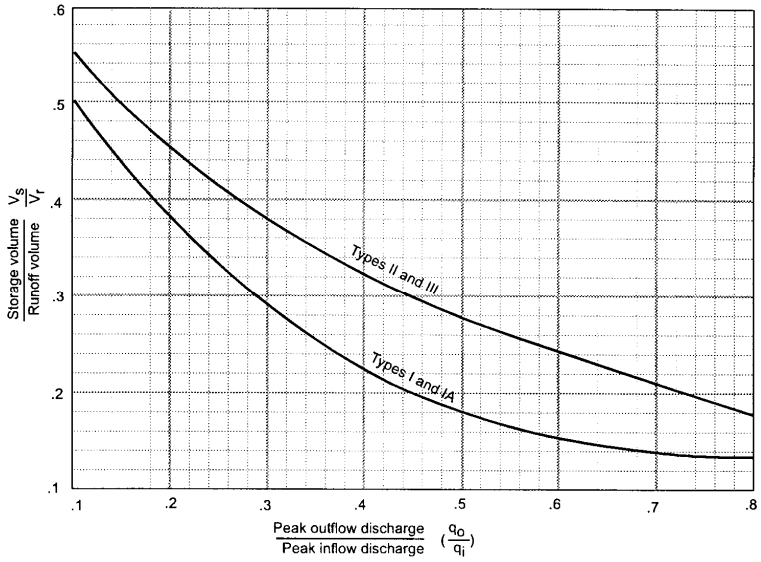

Example for calculating channel protection volume (CP_v):

For this example, the 1-year runoff from a hypothetical project in Providence County is 1.173 ac-ft = 51,096 ft^3, the composite CN for the project drainage area is 68, and the t_c is 15.1 minutes (0.25 hr).

Thus, the Initial abstraction (I_a) = 0.941, the 1-year precipitation (P) = 3.1"; I_a/P = 0.304.

From Exhibit 4-III of NRCS TR-55, read q_u = 450 csm/in (csm = cfs/mi^2). From Figure H-9, for T= 24 hours, read ratio of q_o/q_i = 0.04. Since q_o/q_i < 0.1 and off the graph shown in Figure H-10, use the equation provided above to find V_s/V_r where $V_s = CP_v$.

$$CP_v / V_r = 0.682 - 1.43 (q_O/q_I) + 1.64 (q_O/q_I)^2 - 0.804 (q_O/q_I)^3$$
$$CP_v / V_r = 0.682 - 1.43 (0.04) + 1.64 (0.04)^2 - 0.804 (0.04)^3 = 0.627.$$

$$CP_v = 0.627 * V_r = 0.627 (51{,}096\ ft^3) = \mathbf{32{,}037\ ft^3}$$

Notice that the "short-cut" routing equation from Section 3.3.4 uses a CP_v / V_r = 0.65 and 0.65 > 0.627 that we calculated here; this is because the short-cut method calculates the maximum detention volume required.

Formatted Table

Formatted: Font: 10 pt

APPENDIX I: RHODE ISLAND RIVER AND STREAM ORDER

This appendix includes a list of the rivers and streams in Rhode Island that are 4th order or larger. The CP_v and Q_p requirements of Minimum Standards 4 and 5 (Chapter Three) are waived for projects directly discharging stormwater to one of these rivers/streams unless a downstream analysis is performed and demonstrates that additional controls are necessary. The numbers for each river or stream correspond with the River and Stream Order Map included as Figure I-1.

1. **Cady Brook**; Stream Order = 4
   From Connecticut border to confluence with Mowry Meadow Brook south of Reynolds Road.
   RI0005047R-08 and RI0005047R-03

2. **Clear River (see also #5)**; Stream Order = 4
   From confluence of Clear River and Dry Arm Brook through Wilson Reservoir to confluence with Nipmuc River, northwest of Manley Drive to intersection of Brayton Avenue and Sherman Farm Road.
   RI0001002R-05C

3. **Round Top Brook**; Stream Order = 4
   From its confluence with Chockalog River, east of Round Top Road to confluence with Nipmuc River.
   RI0001002R-11

4. **Nipmuc River**; Stream Order = 4
   From its confluence with Round Top Brook, east of Round Top Road.
   RI0001002R-08

5. **Clear River (see also #2)**; Stream Order = 5
   From its confluence with Nipmuc River, at intersection of Brayton Avenue and Sherman Farm Road. To its ending point with Branch River and Chepachet River east of Pelletie Drive.
   RI0001002R-05C

6. **Stingo Brook**; Stream Order = 4
   From point where two of its tributaries join, north of Chesnut Hill Road and Capron Way to its ending into Chepachet River northeast of its crossing John Steere Road.
   RI0001002R-20

Formatted Table

Formatted: Font: 10 pt

7. **Chepachet River (see also #8)**; Stream Order = 4
   From confluence with Stingo Brook, northeast of Stingo Brook crossing of John Steere Road to point where river splits north of Main Street.
   RI0001002R-03

8. **Chepachet River (see also #7)**; Stream Order = 5
   From point where river splits, north of Main Street, to ending at Branch River and Clear River.
   RI0001002R-03

9. **Branch River**; Stream Order = 5
   From point where Clear River, Chepachet River, and Branch River meet east of Pelletie Drive through Slatersville Reservoir, to the confluence with the Blackstone River just west of the intersection of Franklin Way with Saint Pail Street.
   RI0001002R-01A and RI0001002R-01B

10. **Blackstone River (see also #11 & 13)**; Stream Order = 6
    From the Massachusetts border the Blackstone enters Rhode Island as two separate rivers until its confluence with the Branch River, just west of the intersection of Franklin Way with Saint Paul Street.
    RI0001003R-01A

11. **Blackstone River (see also #10 & 13);** Stream Order = 6
    Enters from the MA border between Canal Street and Harris Avenue to its confluence with Mill River just north of end of Florence Drive.
    RI0001003R-01A

12. **Mill River**; Stream Order = 5
    Enters from the MA border just west of Diamond Hill Road and ends at Blackstone River just north of end of Florence Drive.
    RI0001003R-03

13. **Blackstone River (see also #10 & 11)**; Stream Order = 6
    From the intersection of the Mill River, Peters River and the Blackstone, north of Florence Street to the point where it enters Narragansett Bay.
    RI0001003R-01A and RI0001003R-01B

Formatted: Indent: Left: 0.5"

Formatted: No widow/orphan control

Formatted Table

Formatted: Font: 10 pt

14. **East Sneech Brook to Abbott Run Brook (see also #15)**; Stream Order = 4
    Each Sneech Brook from confluence with Sylvyns Brook North of Nate Whipple Highway and Sneech Pond Road intersection. Flows into Arnold Mills Reservoir. Abbott Run Brook originates at Arnold Mills Reservoir at an unnamed street off of N. Attleboro Road to the MA border south of I-295. Through Rawson Pond and Howard Pond.
    RI0001006R-01A and RI0001006R-03

15. **Abbott Run Brook (see also #14)**; Stream Order = 4
    From MA border east of Curran Road through Robin Hollow Pond through Happy Hollow Pond and ends at the Blackstone River near Mill Street.
    RI0001006R-01B

16. **Ten Mile River**; Stream Order = 4
    Enters from MA border, northeast corner of the state near Crest Drive, runs parallel to Pine Crest Drive then back into MA. Enters RI again near Central Avenue through Slater Park Pond through Central Pond and Turner Reservoir and ends at Omega Pond near intersection of Roger Williams Avenue and Magnolia Street.
    RI0004009R-01B and RI0004009L-01A

17. **Woonasquatucket River**; Stream Order = 4
    Enters the Woonasquatucket Reservoir and begins at intersection with Farnum Pke. Flows into Stillwater Pond and exits from two different locations, joins again and enters Georgiaville Pond, exits near Stillwater Road and ends with its confluence with Moshassuck River and into Narragansett Bay.
    RI0002007R-10A, RI0002007R-10B, RI0002007R-10C and RI0002007R-10D

18. **Stillwater River**; Stream Order = 4
    From point where an unnamed tributary confluences with Stillwater River near Pleasant View Avenue and Spragueville Road intersect to where it enters the Woonasquatucket Reservoir.
    RI0002007R-09

19. **Moshassuck River**; Stream Order = 4
    From the point where Moshassuck River and West River intersect near the I-95N Branch Avenue exit ramps, to its confluence with the Woonasquatucket River.
    RI0003008R-01B and RI0003008R-01C

Formatted: No widow/orphan control

Formatted Table

Formatted: Font: 10 pt

20. **Ponagansett River**; Stream Order = 4, 5
    The stream order 4 begins with confluence of Shippee Brook with Ponagansett River in between Windsor Road and E. Killingly Road. Flows through Barden Reservoir. Stream order 5 begins at exit of Barden Reservoir west of intersection of Hemlock Road and Ponagansett Road and ends at Scituate Reservoir north of Hemlock Road.
    RI0006015R-20

21. **Hemlock Brook**; Stream Order = 4
    Begins with confluence of Hemlock Brook with Paine Brook just north of Anthony Road. Ends at Barden Reservoir at Hemlock Road.
    RI0006015R-10

22. **North Branch Pawtuxet River**; Stream Order = 5
    Begins at Scituate Reservoir at Scituate Avenue. Ends at confluence with South Branch Pawtuxet River to become the Main Stem Pawtuxet River.
    RI0006016R-06A and RI0006016R-06B

23. **South Branch Pawtuxet River**; Stream Order = 4
    Begins at Flat River Reservoir at Gatehouse Farm Road. Ends at confluence with North Branch Pawtuxet River to become Main Stem Pawtuxet River.
    RI0006014R-04A and RI0006014R-04B

24. **Big River**; Stream Order = 4
    Begins at confluence of Carr River with Big River south of Noosnck Hill Road. Ends at Reynolds Pond.
    RI0006012R-02

25. **Main Stem Pawtuxet River**; Stream Order = 5
    Begins at point where the North Branch and South Branch of the Pawtuxet River meet north of Providence Street. Ends at Broad Street where it enters Narragansett Bay.
    RI0006017R-03

26. **Pocasset River**; Stream Order = 4
    Begins at confluence with Simmons Brook. Flows through Print Works Pond and ends at the Main Stem Pawtuxet River north of O'Keefe Lane.
    RI0006018R-03A and RI0006018-03B

27. **Moosup River**; Stream Order = 4, 5
    Stream order 4 begins when West Meadow Brook flows into Moosup River west of Johnson Road. Stream order 5 begins from confluence of Bucks Horn Brook with Moosup River west of Lewis Farm Road to CT/RI border north of Nicholas Road.

Formatted Table

Formatted: Font: 10 pt

RI0005011R-03

28. **Bucks Horn Brook**; Stream Order = 4
From confluence with Warwick Brook east of Cahoone Road to the confluence with the Moosup River west of Lewis Farm Road.
RI0005011R-01

29. **Hunt River**; Stream Order = 4
From confluence with Fry Brook through Potowomut Pond ending at Narragansett Bay at Forge Road.
RI0007028R-03B, RI0007028R-03C and RI0007028R-03D

30. **Adamsville Brook**; Stream Order = 4
From eastern RI border with MA east of Crandall Road to confluence of an unnamed tributary with Adamsville Brook east of the intersection of Crandall Road and the southern end of Stoney Hollow Road.
RI0009041R-01

31. **Unnamed Tributary of Adamsville Brook**; Stream Order = 4
From confluence with Adamsville Brook east of the intersection of Crandall Road and the southern end of Stoney Hollow Road to confluence with another unnamed tributary east of Crandall Road and north of East Road (unnamed r~~oa~~ds).
RI0009041R-01

32. **Saugatucket River**; Stream Order = 4
From confluence with Indian Run Brook at Columbia Street, north of Church Street to outfall at Narragansett Bay near Route 1A.
RI00010045R-05B and RI00010045R-05C

33. **Usquepaug River**; Stream Order = 4
Begins at Glen Rock Reservoir just north of Old Usquepaugh Road. Ends at its confluence with the Pawcatuck River northeast of Zachary Bend Road.
RI0008039R-25

34. **Wood River**; Stream Order = 4
Begins when Falls River and Flat River join north of Ten Rod Road. Flows through Wyoming Pond and Alton Pond before ending at the Pawcatuck River one mile north of Burdickville Road.
RI0008040R-16A, RI0008040R-16B, RI0008040R-16C and RI0008040R-16D

Formatted: Keep with next, Keep lines together

Formatted: Font: 10 pt

Formatted: Font: 10 pt

Formatted: Font: 10 pt

Formatted: Font: 10 pt

Formatted: Font: 10 pt

Formatted Table

Formatted: Font: 10 pt

35. **Unnamed Tributary of Parmenter Brook**; Stream Order = 4
    Begins where Parmenter Brook joins an unnamed tributary and flows into CT south of I-95. Enters back into RI north of High Street and ends at Ashaway River at Wellstown Road.
    RI0008039R-37

36. **Ashaway River**; Stream Order = 4
    Begins at Wellstown Road with confluence of an unnamed tributary of Parmenter Brook. Ends at Pawcatuck River west of Laurel Street at CT/RI border.
    RI0008039R-02A and RI0008039R-02B

37. **Pawcatuck River**; Stream Order = 4, 5, 6
    Stream order 4 begins at Wordens Pond about one mile east of Biscuit City Road. Stream order 5 beings at confluence of Pawcatuck River with Usquepaug River and continues until stream order 6 beings at RI/CT border about 2000 feet north of the end of White Rock Road. Ends at Broad Street where it flows into Little Narragansett Bay.
    RI0008039R-18A, RI0008039R-18B, RI0008039R-18C, RI0008039R-18D and RI0008039R-18E

Formatted: Font: 10 pt

Formatted: Font: 10 pt

Formatted: No widow/orphan control

Formatted Table

Formatted: Font: 10 pt

Figure I-1 River and Stream Order Map. Streams Fourth-order and Greater are Highlighted in Yellow.

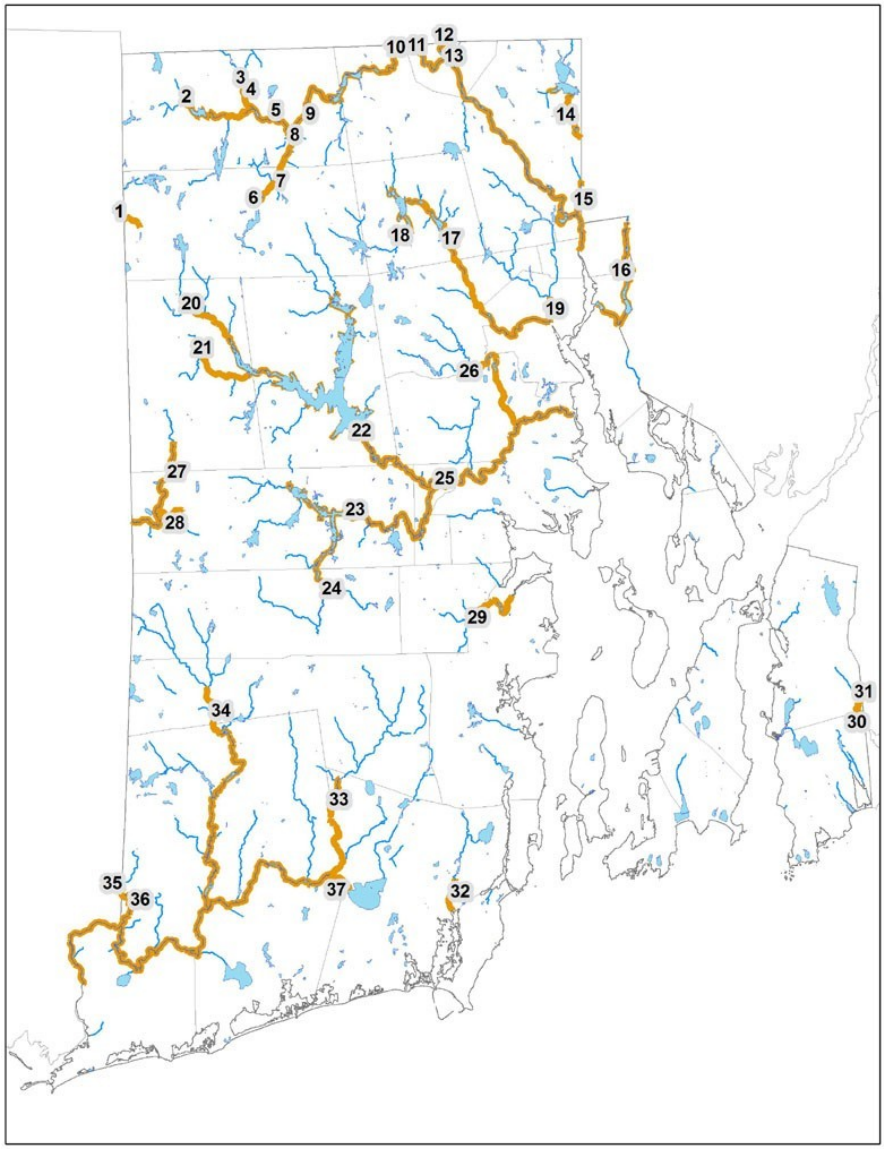

Formatted Table

Formatted: Font: 10 pt

~~<Page blank intentionally>~~

~~Appendix J: TAP PROTOCOL~~

TECHNOLOGY ASSESSMENT PROTOCOL (TAP)

APPENDIX J: FOR INNOVATIVE AND EMERGING TECHNOLOGIES

~~for~~

~~THE RHODE ISLAND DEPARTMENT OF ENVIRONMENTAL MANAGEMENT (RIDEM) AND THE~~
~~RHODE ISLAND COASTAL RESOURCES MANAGEMENT COUNCIL (CRMC)~~

~~By~~

~~UNIVERSITY OF NEW HAMPSHIRE STORMWATER CENTER (UNHSC)~~

~~April 2008~~

Formatted: Font: Not Bold

Formatted: Heading 1,1-SWManual,Heading 1 Char,Heading 1 Char1 Char,Heading 1 Char Char Char, Left

Formatted: Not All caps

~~LIST OF ABBREVIATIONS~~

~~ADS~~	~~Advanced Drainage Systems~~
~~AS~~	~~Auto Sampler~~
~~ASTM~~	~~American Society of Testing and Materials~~
~~BMP~~	~~Best Management Practice~~
~~CDS~~	~~Continuous Deflection Separator~~
~~CICEET~~	~~Cooperative Institute for Coastal and Estuarine Environmental Technology~~
~~CRMC~~	~~Coastal Resources Management Council~~
~~CZARA~~	~~Coastal Zone Act Reauthorization Amendment~~
~~D15~~	~~Particle diameter by which 15% is smaller by weight~~
~~D50~~	~~Particle diameter by which 50% is smaller by weight~~
~~D85~~	~~Particle diameter by which 85% is smaller by weight~~
~~DIN~~	~~Dissolved Inorganic Nitrogen~~
~~EMC~~	~~Event Mean Concentration~~
~~EPP~~	~~Effluent Probability Plots~~
~~ER~~	~~Efficiency Ratio~~
~~ERG~~	~~Environmental Research Group~~
~~ETV~~	~~Environmental Technology Verification~~
~~LID~~	~~Low Impact Development~~
~~NJCAT~~	~~New Jersey Corporation for Advanced Technology~~
~~NJDEP~~	~~New Jersey Department of Environmental Protection~~
~~NOAA~~	~~National Oceanographic and Atmospheric Administration~~
~~PSD~~	~~Particle Size Distribution~~
~~PSDAS~~	~~Particle Size Distribution by Auto Sampler~~
~~PSDTC~~	~~Particle Size Distribution by Total Capture Method~~
~~RE~~	~~Removal Efficiency~~
~~SOL~~	~~Summation of Loads~~
~~SPS~~	~~Solids Performance Standard~~
~~SSC~~	~~Suspended Sediment Concentration~~
~~TAP~~	~~Technology Assessment Protocol~~
~~TAPE~~	~~Technology Assessment Protocol-Ecology~~
~~TARP~~	~~Technology Acceptance Reciprocity Partnership~~
~~TC~~	~~Total Capture~~
~~TP~~	~~Total Phosphorous~~
~~TPH-D~~	~~Total Petroleum Hydrocarbons-Diesel Range~~
~~TSS~~	~~Total Suspended Solids~~
~~UNH~~	~~University of New Hampshire~~
~~UNHSC~~	~~University of New Hampshire Stormwater Center~~
~~WERF~~	~~Water Environment Research Foundation~~

J.1 INTRODUCTION

New innovative and cost-effective technologies for managing stormwater are constantly emerging, making it difficult for stormwater guidance and regulations to ~~*keep up*~~.adapt. Rather than have regulators and local communities depend ~~*completely*~~ on data from a variety of ~~*manufacturers, the University of New Hampshire Stormwater Center (UNHSC)*~~sources, this protocol has been developed ~~*a specific protocol*~~ for evaluating the performance and applicability of any new treatment practices. New treatment practices must undergo a third-party evaluation using the Technology Assessment Protocol (TAP) ~~*(see Appendix H)*~~ prior to approval for usage for both primary treatment and pretreatment ~~*(secondary)*~~ purposes. Reciprocity is given for practices approved elsewhere under TARP (*Technology Acceptance Reciprocity Partnership*) and TAPE (*Technology Assessment Protocol– Ecology*) provided that any deficiencies are addressed with respect to the eleven Minimum Standards presented in Chapter Three.

~~*TAP describes testing and reporting procedures to evaluate the effectiveness of innovative and emerging stormwater treatment technologies. The objectives of this protocol are to characterize, with a reasonable level of statistical confidence, an emerging technology's effectiveness in removing pollutants from stormwater runoff for an intended application. The protocol requires an independent third-party verification that will ensure stormwater treatment systems meet the stormwater performance goals and criteria for new development, redevelopment and retrofit situations established in this manual.*~~ ~~Approval will be contingent on submission of objective, verifiable data that meets the Performance Standards and Criteria outlined in Chapter Three. *Stormwater treatment technologies will be designated as either i) primary treatment practices for meeting water quality criteria, or ii) pretreatment, secondary treatment, and quantity control stormwater management practices. Achieving primary treatment designation is dependent upon meeting the Minimum Standard 3.*~~ ~~By obtaining accurate and relevant data, the regulatory community can assess performance claims for a particular best management practices (BMPs).~~

~~J.1 INTRODUCTION~~

The Technology Assessment Protocol (TAP) describes testing and reporting procedures to evaluate the effectiveness of innovative and emerging stormwater treatment technologies. The objectives of this protocol are to characterize, with a reasonable level of statistical confidence, an emerging technology's effectiveness in removing pollutants from stormwater runoff for an intended application. The protocol requires an independent third-party verification that will ensure stormwater treatment systems meet the stormwater performance goals and criteria for new development, redevelopment and retrofit situations established in this manual.

Approval will be contingent on submission of objective, verifiable data that meets the Performance Standards and Criteria outlined in Chapter Three. Stormwater treatment technologies will be designated as either i) primary treatment practices for meeting

Formatted: Font: Not Italic
Formatted: Font: Not Italic
Formatted: Font: Not Italic
Formatted: Font: Not Italic
Formatted: Font: Not Italic
Formatted: Font: Not Italic
Formatted: Font: Not Italic
Formatted: Font: Not Italic
Formatted: Font: Not Italic
Formatted: Font: Not Italic
Formatted: Font: Not Italic
Formatted: Font: Not Italic
Formatted: Normal,Normal-swmanual
Formatted: Font: Not Italic

water quality criteria, or ii) pretreatment, and/or quantity control (i.e., CP_v and Q_p) stormwater management practices. Achieving primary treatment designation is dependent upon meeting the Minimum Standard 3. By obtaining accurate and relevant data, the regulatory community can assess performance claims for a particular best management practices (BMPs).

Formatted: Font: Not Italic

Formatted: Normal,Normal-swmanual

The TAP is adapted largely from ~~3~~2 assessment protocols: TAPE (*Technology Assessment Protocol– Ecology*), ~~and WERF 04-SW-4, *Improved Protocol for Classification and Analysis of Stormwater-Borne Solids,*~~ and TARP (*Technology Acceptance Reciprocity Partnership*). The performance statistics review is adapted from the guidance ~~document by~~ documents from TAPE and USEPA ~~and ASCE (2002~~(Geosyntec 2009) entitled Urban Stormwater BMP Performance Monitoring. The TAP addresses ~~the primary~~ limitations in the TARP protocol ~~preventing its widespread adoption~~with respect to the need for standardized reporting to facilitate rapid review and ~~addresses important discrepancies in analytical methods for sediment characterization drawing heavily~~approval based on recommendations from the ~~recent WERF publication (Roesner et al., 2007).~~ASCE/EWRI Task Committee on Guidelines for Certification of Manufactured Stormwater BMPs.

The TAP strongly recommends parallel testing evaluation under rigorous and uniform conditions. The utility of parallel testing is that site characteristics (land use, contaminant loading, sediment characteristics) are consistent for all tested ~~devices~~practices and rainfall event characteristics (depth, intensity, duration, antecedent dry period) will be uniform for given performance periods. Identical site and rainfall characteristics enable rigorous performance evaluations that would otherwise complicate direct performance comparisons. This is especially critical given the well know limitations of stormwater solids sampling and its implications on performance testing.

J.2 Purpose Of This Guidance Document

This guidance defines a testing protocol and process for evaluating and reporting on the performance and appropriate uses of existing and emerging stormwater treatment technologies. Approval will be contingent on submission of objective, verifiable data that meets the ~~Performance~~ Standards and Performance Criteria outlined in Chapter ~~3~~Three of the Rhode Island Stormwater Manual. Stormwater treatment technologies will be designated as either i) primary treatment practices for meeting water quality criteria, or ii) pretreatment, ~~secondary treatment,~~ and quantity control stormwater management practices. Achieving primary treatment designation is dependent upon meeting the Minimum Standard 3.

By obtaining accurate and relevant data, the regulatory community can assess performance claims for ~~a~~ particular best management practices (BMPs). This document can be used to evaluate the effectiveness of public domain and proprietary BMPs for

the protection of water resources. The development and use of innovative, cost-effective stormwater management technologies are encouraged.

The permitting agency or designated alternate will be responsible for reviewing and administering approvals.

The financial burden for system testing lies with the proponent of the emerging technology. The regulatory entities will not provide funding for this work.

J.3 Independent Third Party

The TAP requires independent third party work for all reports that contain field data regardless of where this data were collected.

Parties that do not have a direct financial interest in the outcome of testing a treatment ~~device~~practice (e.g~~.~~., public agencies' testing of public domain treatment facilities) are not required to obtain an independent third party review.

At a minimum, an independent professional must:

- Complete the data validation report verifying that monitoring was conducted in accordance with an approved QAP~~.~~; and
- Prepare a Technology Evaluation Report (TER) that includes a testing results, summary, conclusions, and comparison with the Minimum Standard 3.

J.4 Treatment Performance Goals

Treatment performance goals are the Standards and Performance Criteria ~~and Standards~~ outlined in the Minimum Standard 3. These include performance measures for solids, phosphorous, nitrogen, and bacteria. There are several categories of solids in stormwater. These include total solids, total suspended solids, suspended solids concentration, total dissolved solids, and gross solids. For treatment performance goals, for the purposes of the TAP, performance is measured with respect to total suspended solids ~~refers to all particles smaller than 500 microns in diameter.~~. Total solids refers to all particles regardless of size.

J.4.1 Primary Treatment

The stormwater performance goals are outlined in Minimum Standard 3 ~~and include the following criteria:~~. Systems will be approved for primary treatment if they meet the TSS, bacteria, TP, and TN standards.

~~1. Remove 90% of TSS, 250 micron, and 75 micron particles for influent concentrations ranging from 100 to 200 mg/L.~~

~~2. Achieve an effluent concentration<= 10 mg/L TSS for influent concentrations less than 100 mg/L.~~
~~3. Remove 90% of bacteria, and either 40% of TP for discharges to freshwater systems, or 30% TN for discharges to saltwater systems~~

J.4.2 Pretreatment Applications

The pretreatment menu facility choices do not meet Minimum Standard 3. They are designed to improve water quality and enhance the effective design life of practices by concentrating the maintenance to a specific, easily serviceable location. The pretreatment applications generally apply to~~:~~

- ~~Project sites using infiltration and filtration~~ all treatment~~.~~
- ~~Treatment~~ systems where pretreatment is needed to assure and extend performance of the downstream basic or enhanced treatment facilities.

Formatted: No bullets or numbering

Formatted: Font: Times New Roman

~~The pretreatment menu facility choices should achieve 50% removal of total suspended solids for influent concentrations ranging from 100 to 200 mg/L. For influent concentrations less than 100 mg/l, the facilities should achieve an effluent quality of 50 mg/l total suspended solids.~~

J.5 Technology Assessment Protocol (TAP) Methodology

J.5.1 Objectives of the Test Protocol

The objectives of this protocol are to characterize, with a reasonable level of statistical confidence, an emerging technology's effectiveness in removing pollutants from stormwater runoff and to compare test results with proponents' claims.

J.5.2 Primary Treatment Level Designation

Primary treatment level designation is granted based on the information submitted and best professional judgment. Submitting the appropriate amount of data does not guarantee that primary treatment designation will be given. Decisions are based on system performance and other factors ~~including~~such as maintenance burden, operation, and integrity~~, etc~~. Technologies not granted primary treatment will automatically be considered as pretreatment or secondary treatment.

J.5.3 Quality Assurance Plan (QAP)

Before initiating testing, a quality assurance ~~project~~ plan (QAP) must be prepared based on this protocol. The QAP must be submitted for review before conducting field tests. The QAP must specify the procedures to be followed to ensure the validity of the test results and conclusions. A person with good understanding of analytical chemistry methods should develop the QAP in consultation with the analytical laboratory. The

QAP author should also be knowledgeable about field sampling and data validation procedures.

QAP guidance includes the following basic elements:

Title Page;
Table of contents;
Project organization and schedule;
Background information and information about the technology to be tested;
Sampling design, including field procedures, sampling methods;
Method quality objectives, including statistical goals;
Laboratory procedures;
Field and laboratory quality control;
Data management procedures;
Data review, verifications and validation; and
Interim progress report(s) during the testing program.

The QAP must specify the name, address, and contact information for each organization and individual participating in the performance testing. Include project manager, test site owner/manager, field personnel, consultant oversight participants, and analytical laboratory that will perform the sample analyses. Identify each study participant's roles and responsibilities and provide key personnel resumes. In addition, provide a schedule documenting when the vendor's equipment will be installed, the expected field testing start date, projected field sampling completion, and final project report submittal. It is recommended that time be allocated for initial startup and testing of the treatment system and monitoring equipment. Vendors should allow up to three months for QAP review and approval.

J.5.4 Field Testing and Site Characterization

The TAP recommends parallel testing evaluation under rigorous and uniform conditions. Field test sites should be consistent with the technology's intended applications. Sites must provide influent concentrations typical of stormwater for those land use types [1]. Include the following information about the test site:

- Field test site catchment area, tributary land uses, (roadway, commercial, high-use site, residential, industrial, etc.) and amount of impervious cover.
- Description of potential pollutant sources in the catchment area (e.g., parking lots, roofs, landscaped areas, sediment sources, exterior storage, or process areas).
- Baseline stormwater quality information to characterize conditions at the site. For sites that have already been developed, it is recommended that

[1] ~~Typical~~National median stormwater concentrations contains about ~~42, 50, 80~~43, 49, 81, and ~~100~~99 mg/L TSS for commercial, residential, industrial, and freeway land use classifications respectively (NSQD, 2005). As a guideline for other contaminants, refer to the National Stormwater Quality Database for ranges in pollutant concentrations in stormwater for various land uses.

Formatted: Indent: Left: 0", Hanging: 0.09", Tab stops: 0.25", Left + Not at 0.2"

the ~~vendor~~investigator collect baseline data to provide a sizing basis for the ~~device~~practice, and to determine whether site conditions and runoff quality are conducive to performance testing.

- Site map showing catchment area, drainage system layout, and treatment ~~device~~practice and sampling equipment locations.
- Catchment flow rates (i.e., water quality design flow, 1-year, 10-year, and 100-year peak flow rates) at 15-minute and 1-hour time steps as provided by an approved continuous runoff model.
- Make, model, and capacity of the treatment device, if applicable.
- Location and description of the closest receiving water body.
- Description of bypass flow rates and/or flow splitter designs necessary to accommodate the treatment technology.
- Description of pretreatment system, if required by site conditions or technology operation.
- Description of any known adverse site conditions such as climate, tidal influence, high groundwater, rainfall pattern, steep slopes, erosion, high spill potential, illicit connections to stormwater catchment areas, industrial runoff, etc.

Formatted: Font: 10 pt

J.5.5 ~~Number of~~ Stormwater ~~Samples~~Data Collection Requirements

~~Base the number of sample events on statistical significance. At a minimum 12 sampling events are needed for statistically significant performance data. Regardless of statistical significance, 35 sample events is the maximum sampling effort required for this protocol. This requirement applies to flow-weighted and discrete flowrate (including design flowrate) composite sampling. In order to assess performance on an annual average basis, samples should be collected over a range of rainfall intensities encountered during an average year.~~

~~J.5.6 Storm Event Guidelines~~

The following ~~storm~~ stormwater data and event ~~guidelines~~requirements are ~~meant~~given below to assist in developing the sampling plan. ~~If all the storm event guidelines are met, runoff produced will likely contain pollutant concentrations within an acceptable range.~~

Table J-1 Stormwater Data Collection Requirements

~~Feature~~Item	~~Explanation~~Stormwater Data Collection Requirement	~~Guidelines~~
~~Minimum storm depth~~1	~~Total rainfall amount during the sampling event~~Water level in practice shall be continuously recorded throughout the field testing program, including non-sampled storms and non-rainfall days.	~~0.15 inches~~
2	Range of recorded water levels shall extend below normal, low flow or dry weather level in practice to above treatment capacity	
3	Recorded water levels shall be plotted along with rainfall.	
4	Include a description of each maintenance task performed, reason for maintenance, quantities of sediment removed, and a discussion of any anomalous, irregular, or missing maintenance data.	
~~Storm start/end (antecedent dry period)~~5	~~Defines the storm event's beginning and end as designated by minimum time interval without significant rainfall~~To determine practice's required maintenance interval, the minimum duration of the overall field testing program shall be one year beginning at installation, commissioning or the beginning of the removal rate testing, whichever is greater.	~~6 hours minimum with less than 0.04 inches of rain~~
6	Storm event must have a minimum total rainfall depth of 0.1 inches.	
~~Minimum storm duration~~7	~~Shortest acceptable runoff duration~~ Inter-event dry period between storms shall begin when runoff from prior storm ceases.	~~1 hour~~
8	Minimum of 20 storms sampled, although 25 or more are recommended.	
9	Storms do not need to be consecutive.	
10	Peak runoff of at least 3 storms shall exceed 75% of the practice's capacity.	
11	Minimum total rainfall for all storms sampled shall be 15 inches.	
12	Minimum number of samples collected shall be 10 for storms lasting longer than 1 hour or more.	
13	Minimum number of samples collected shall be 6 for storms lasting less than 1 hour.	
14	Samples shall be taken over time to cover a minimum of 70% of total runoff volume.	
15	Rainfall shall be recorded continuously during events with max time interval of 5 minutes for runoff collection based on time and max rainfall interval of 0.01 inches for runoff collection based on volume.	
16	Rainfall shall be recorded throughout the sampling program.	
~~Minimum storm intensity~~17	~~Lowest intensity that qualifies as a rainfall event.~~Rainfall from non-sampled events can be recorded with same gauge or obtained from a nearby gauge provided that gauge has minimum recording interval of 1 hour.	~~None, as long as above guidelines are met~~[1]

Formatted: Centered
Formatted Table
Formatted: Centered
Formatted: Normal,Normal-swmanual
Formatted: Font: Bold
Formatted: Font: 10 pt, Not Bold, Not Italic
Formatted: Centered
Formatted Table
Formatted: Normal,Normal-swmanual
Formatted: Font: Bold
Formatted: Font: 10 pt, Not Italic
Formatted: Centered
Formatted Table
Formatted: Normal,Normal-swmanual
Formatted: Font: Bold
Formatted: Font: 10 pt
Formatted: Centered
Formatted Table
Formatted: Normal,Normal-swmanual
Formatted: Font: Bold
Formatted: Font: 10 pt

18	1) Max. 15 minute rainfall intensity for shall be 5 in/hr (i.e. 1.25 in/15-min).
19	2) Max. total rainfall shall be 3in.
20	3) 1 storm sampled may exceed previous two requirements.

~~[1] Average intensities should exceed 0.03 inches per hour of at least half the sampled storms.~~

~~J.5.7~~J.5.6 Stormwater Field Sampling Procedures

This section describes field sampling procedures necessary to ensure the quality and representativeness of the collected samples. This section presents discussions on sampling methodology (e.g., discrete versus composite sampling), flow monitoring, target pollutant selection, sample handling and preservation, and field QA/QC.

~~J.5.7.1~~J.5.6.1 Sampling methods.

Collect samples using automatic samplers, except for chemical constituents that require manual grab samples. Use teflon tubing if samples will be analyzed for organic contaminants. To use automatic sampling equipment for insoluble TPH/oil, a determination is needed that any TPH/oil adherence to the sampling equipment is accounted for and meets QA/QC objectives. This determination requires support with appropriate data. The responsible project professional should certify that the sampling equipment and its location would likely achieve the desired sample representativeness, aliquots, frequency, and compositing at the desired influent/effluent flow conditions.

The following three sampling methods have been identified for evaluating whether new treatment technologies will meet the stormwater treatment goals:

1. Automatic flow-weighted composite sampling. Collect samples over the storm event duration and composite them in proportion to flow. This sampling method generates an event mean concentration and can be used to determine whether the treatment technology meets the pollutant removal goals on an average annual basis. For this method, samples should be collected over the entire runoff period. As a guideline, at least 10 aliquots should be composited, covering at least ~~75~~70 percent of each storm's total runoff volume. The greater the number of aliquots and storm coverage the greater the confidence that the samples represent the event mean concentration for the entire storm.

2. Discrete flow composite sampling. For this method, program the sampler to collect discrete flow-weighted samples. Combine samples representing relatively constant inflow periods (e.g., less than 20 percent variation from the median flow) to assess performance under specific flow conditions. The monitoring approach must also address the effect of lag time within the ~~device~~practice that would affect the comparability of influent and effluent samples paired for purposes of evaluating a particular flow rate. One way to achieve this is to set the flow pacing so that each discrete sample bottle fills when the total runoff volume passing the sampler is equal to 8 times the treatment unit's detention volume. Other ways to account for lag time may also be considered.

Proponents can use this method to determine whether the treatment technology achieves the pollutant removal goals at the design hydraulic loading rate. For this method, collect samples over a flow range that includes the manufacturer's recommended treatment system design flow rate. Sample other flow ranges if needed to characterize the efficiencies of the ~~device~~practice over a reasonable range of hydraulic loading rates. Distribute samples over a range of flow rates from 50-150% of the ~~device's~~practice's design loading rate. This technique is necessary for ~~devices~~practices where the influent and effluent flowrate are nearly equal because the system does not control the effluent flowrate (e.g., swirl separators). This technique is required to verify how the ~~device~~practice functions at varying flowrates.

3. Combination method. For flow-through ~~devices~~practices, proponents can use a combination of the above two methods to evaluate treatment goals. For the combination method, collect discrete flow composite samples as allowed during a single storm event and process for analysis. Composite the remaining bottles in the sampler into a single flow-weighted composite sample to capture the entire runoff event for analysis. Mathematically combine the results from the discrete flow composite samples and the single flow-weight composite sample to determine the overall event mean concentration.

~~J.5.7.2~~J.5.6.2 Sampling locations.

Provide a site map showing all monitoring/sampling station locations and identify the equipment to be installed at each site. To accurately measure system performance, samples must be collected from both the inlet and outlet from the treatment system. Sample the influent to the treatment technology as close as possible to the treatment ~~device~~practice inlet. Samples should represent the total runoff from the catchment area ~~and should not include debris and particles greater than 500 microns in diameter (see section Particle Size Distribution Methodologies).~~. To ensure that samples represent site conditions, design the test site so that influent samples can be collected from a pipe that conveys the total influent to the unit. To avoid skewing influent pollutant concentrations, sample the influent at a location unaffected by accumulated or stored pollutants in, or adjacent to, the treatment ~~device~~practice.

Influent, effluent, and bypass sampling shall be conducted upstream and downstream of any practice diversions and/or bypass so that the entire sampled storm runoff can be included in sampling. In some instances bypass sampling may not be possible.

Formatted: Indent: Left: 0"

Sample the effluent at a location that represents the treated effluent. If bypass occurs, measure bypass flows and calculate bypass loadings using the pollutant concentrations measured at the influent station. In addition, be aware that the settleable or floating solids, and their related bound pollutants, may become stratified across the flow column in the absence of adequate mixing. Collect samples at a location where the stormwater flow is well-mixed.

Formatted: Font: Arial

Formatted: Normal,Normal-swmanual, Indent: Left: 0"

~~J.5.7.3~~J.5.6.3 Sampler installation, operation, and maintenance.

Provide a detailed sampling equipment description (make and model) as well as equipment installation, operation, and maintenance procedures. Discuss sampler installation (e.g., suction tube intake location relative to flow conditions at all sampling locations, field equipment security and protection), automatic sampler programming (e.g., composite versus discrete sampling, proposed sampling triggers and flow pacing scheme), and equipment maintenance procedures. Install and maintain samplers in accordance with manufacturer's recommendations. Indicate any deviations from manufacturer's recommendations. Provide a sampling equipment maintenance schedule. When developing the field plan, pay particular attention to managing the equipment power supply to minimize the potential for equipment failure during a sampling event.
Note: Tygon or teflon tubing may be used for sampling conventional parameters and metals.

~~J.5.7.4~~J.5.6.4 Flow monitoring.

Measure and record flow into and out of the treatment ~~device~~practice on a continuous basis over the sampling event duration. The appropriate flow measurement method depends on the nature of the test site and the conveyance system. Depth-measurement ~~devices~~practices and area/velocity measurement ~~devices~~practices are the most commonly used flow measurement equipment. For offline systems or those with bypasses, measure flow at the bypass as well as at the inlet and outlet. Describe the flow monitoring equipment (manufacturer and model number), maintenance frequency and methods, and expected flow conditions (e.g., gravity flow or pressure flow) at the test site. For offline flow, describe the flow splitter that will be used and specify the bypass flow set point. Identify site conditions, such as tidal influence or backwater conditions that could affect sample collection or flow measurement accuracy. Flow should be logged at a ~~15~~5-minute or shorter interval, depending on site conditions.

~~J.5.7.5~~J.5.6.5 Rainfall monitoring.

Measure and record rainfall at 15-minute intervals or less during each storm event from a representative site. Indicate the type of rain gauge used (e.g., an automatic recording electronic rain gauge, such as a tipping bucket connected to a data logger, that records rainfall in 0.01 inch increments), provide a map showing the rain gauge location in relation to the test site, and describe rain gauge inspection and calibration procedures and schedule. Install and calibrate equipment in accordance with manufacturer's instructions. At a minimum, inspect the rain gauge after each storm and if necessary, maintain it. In addition, calibrate the gauge at least twice during the field test period. If the onsite rainfall monitoring equipment fails during a storm sampling event, use data

from the next-closest, representative monitoring station to determine whether the event meets the defined storm guidelines. Clearly identify any deviations in the TER report. Nearby third party rain gauges may only be used in the event of individual rain gauge failure and only for the period of failure. If third party rain gauges are used to fill in data gaps, establish a regression relationship between site and third party gauges and use the regression equation to adjust the third-party data to represent site rainfall when needed.

J.5.7.6J.5.6.6 Sampling for TSS, SSC, Nutrients, and Bacteria

Standardized test methods should be used such as EPA's Methods and Guidance for the Analysis of Water and the American Public Health Association's Standard Methods for the Examination of Water and Wastewater. Other nationally recognized organizations, such as American Water Works Association (AWWA) and NSF International, have produced standards that may be used.

This protocol defines TSS as matter suspended in stormwater, excluding litter, debris, and other gross solids exceeding 500 microns in diameter (larger than medium-sized sand). Conceptually this definition is consistent with the Standard Methods 2540D approach, which excludes large particles if their inclusion is not desired. . It is recognized that TSS (Standard Methods 2540D) has limitations with respect to bias due to particle size and representativeness. As a result it is recommended that samples are also tested for Suspended Sediment Concentration (SSC) (ASTM D-3977). SSC has been shown to show excellent representativeness for load and total solids (Roseen et al., 2009(a)). TSS is the current regulatory measure and SSC is being reported as a superior measure although not regulated.

Sampling for nutrients will include dissolved inorganic nitrogen (DIN, SM 4500, EPA Method 353.2), Total Kjeldahl Nitrogen (TKN, EPA Method 351.2), total nitrogen (TN), soluble reactive phosphate (orthophosphate) (SRP, EPA Method 365.3), and total phosphorous (TP, EPA Method 365.3).

Sampling for bacteria will include Total Coliform (EPA Method 1604), Enterococci (EPA Method 1106.1), and Escherichia coli (EPA Method 1103.1). Not all measures will be appropriate in all conditions. E. coli is salt intolerant and may not be present in certain locations where deicing is common or saline water is present.

It is understood that sampling and analyses for nutrients and bacteria can be problematic for 6-hour holding times with anything other than grab samples. Automated samplers will need to maintain sample storage at 1-4°C. As per method (1604) for drinking water samples, they should be analyzed within 30 hours of collection for bacteria. Nutrients can be stored longer at near frozen temperatures (Avanzino and Kennedy, 1993).

To determine percent TSS reduction, the samples must represent the vertical cross section (be a homogeneous or well-mixed sample) of the sampled water at the influent and the effluent of the device.practice. Select the sampling location and place and size

the sampler tubing with care to ensure the desired representativeness of the sample and the stormwater stream. ~~The influent sample must represent only particles that are smaller than 500 microns to be considered as a stand-alone treatment device. The sampling and analysis procedure for determining the particle size fraction below 500 microns can include sieve, such as US Standard #35 sieve, and instrumental analyses.~~ The site professional should select the method using best professional judgment. Performance goals apply on an average annual basis to the entire annual discharge volume (treated plus bypassed).

~~J.5.7.7 Sampling for Total Solids~~

~~Large 7000 liter first flush samples will be taken for 3 storms through out the year to measure total solids (TS) for which a concurrent storm volume is monitored by auto-sampler. Large volume samples enable the capture of the entire sediment load (total solids) for the first flush and respective sampling period. From this large volume sample total solid (TS) method, the "effective" particle size distribution of sediments entering the systems are determined in comparison with accumulated sediments. PSDs are determined using wet sieving and hydrometer (ASTM Standard D 422 – 63). PSDs are not to be compared with samples obtained for TSS and which are determined by laser diffraction. Method consistency is needed for PSD to be comparable.~~

~~A serial decantation process is used to reduce the volume over a period 96 hours. The TS sample is allowed to settle for 48 hours. Half of the volume is then decanted transferred into a settling tank. After an additional 48 hours, a second decanting occurred, which allowed for the sediments to be recovered, wash sieved, and weighed to develop the mass of total solids and influent particle size distribution (PSD).~~

Accumulated Sediment Sampling Procedures

Measure the sediment accumulation rate to help demonstrate facility performance and design a maintenance plan. Practical measurement methods would suffice, such as measuring sediment depth, immediately before sediment cleaning and following test completion. ~~PSDs~~Particle size distribution (PSD) analyses are determined using wet sieving and hydrometer (ASTM Standard D 422 – 63).

Formatted: No widow/orphan control

Use several grab samples (at least four) collected from various locations within the treatment system to create a composite sample. This will ensure that the sample represents the total sediment volume in the treatment system. For QA/QC purposes, collect a field duplicate sample (see following section on field QA/QC). Keep the sediment sample at 4° C during transport and storage prior to analysis. If possible, remove and weigh (or otherwise quantify) the sediment deposited in the system. Quantify or otherwise document gross solids (debris, litter, and other particles ~~exceeding 500 microns in diameter).~~). Use volumetric sediment measurements and analyses to help determine maintenance

requirements, calculate a TS mass balance, and determine if the sediment quality and quantity are typical for the application.

~~J.5.7.8 Particle Size Distribution (PSD)~~

J.5.6.7 Sampling for PSD

To meet the solids removal goals, treatment technologies must be capable of removing TSS~~, and TS~~ across the size fraction range typically found in urban runoff. Field data show most TSS particles are silt sized particles. PSD analyses must be performed for 3 paired events per year for influent, effluent, and accumulated residual sediments at the end of the monitoring period. Comparisons of PSD ~~obtained by TS and Accumulated~~in the influent and effluent and the accumulated residual sediments will demonstrate the particle range of sediments removed and ~~unremoved. PSDs are not to be compared using samples obtained from autosampler because of the known bias towards large particles.~~un-removed. PSD data can also provide information regarding total solids transport during a storm.

Of the analytical procedures available, the Coulter Counter (Model 3) and the laser-diffraction method are used for samples obtained by ~~autosampler~~auto-sampler and for measuring smaller particles. Sieving can only be used to quantify large volume samples with sediment volumes typically in excess of 500 grams. Due to the potential differences in precision among analytical procedures (Webb, 2000), use the same analytical apparatus and procedure for each evaluation test program. A recommended PSD analytical procedure using laser diffraction instrumentation and sieve analysis is included. It must be recognized that PSDs obtained by optical measure (laser diffraction and Coulter Counter) will have limited direct comparison with sieving and hydrometer analysis. Refer to Pitt (2002) for a comprehensive discussion on PSD in stormwater runoff.

Formatted: Font: Not Bold

J.6 Field Quality Assurance and Quality Control (QA/QC)

The field QA/QC section describes the measures that will be employed to ensure the representativeness, comparability, and quality of field samples. Field QA/QC should include the elements listed below:

J.6.1 Equipment calibration

Describe the field equipment calibration schedule and methods, including automatic samplers, flow monitors, and rainfall monitors. The accuracy of the flow meters is very important so their calibration should be carefully conducted by the site professional in accordance with manufacturer's recommendations.

J.6.2 Recordkeeping

Maintain a field logbook to record any relevant information noted at the collection time or during site visits. Include notations about any activities or issues that could affect the

sample quality (e.g~~.~~., sample integrity, test site alterations, maintenance activities, and improperly functioning equipment). At a minimum, the field notebook should include the date and time, field staff names, weather conditions, number of samples collected, sample description and label information, field measurements, field QC sample identification, and sampling equipment condition. Also, record measurements tracking sediment accumulation. In particular, note any conditions in the tributary basin that could affect sample quality (e.g., construction activities, reported spills, other pollutant sources). Provide a sample field data form in the QAP.

J.6.3 Laboratory Quality Assurance Procedures

Laboratories performing stormwater sample analysis must be certified by a national or state agency regulating laboratory certification or accreditation programs. Report results in the TER or use level designation application. Include a table with the following:

- Analyte
- Sample matrix
- Laboratory performing the analysis
- Number of samples
- Analytical method (include preparation procedures as well as specific methods especially when multiple options are listed in a method)
- Reporting limits for each given analytical method (include the associated units).

J.6.4 Data Management Procedures

Include a quality assurance summary with a detailed case narrative that discusses problems with the analyses, corrective actions if applicable, deviations from analytical methods, QC results, and a complete definitions list for each qualifier used. Specify field/laboratory electronic data transfer protocols (state the percent of data that will undergo QC review) and describe corrective procedures. Corrections to data entries should include initials of the person making the correction and the date corrected. Indicate where and how the data will be stored.

J.6.5 Data Review, Verification, and Validation

Describe procedures for reviewing the collection and handling of the field samples. Establish the approach that will be used to determine whether samples meet all flow sampling and rainfall criteria.

~~Describe laboratory data review procedures.~~ Validation requires thoroughly examining data quality for errors and omissions. Establish the process for determining whether data quality objectives have been met. Include a table indicating percent recovery (%R) and relative standard deviation (RSD) for all QC samples. Determine whether precision and bias goals have been met. Establish a procedure to review reporting limits to determine whether non-detected values exceed reporting limit requirements.

Formatted: No widow/orphan control, Don't keep with next

Formatted: No widow/orphan control

Analyze all data for statistical significance. Guidance on appropriate statistics can be found in Section J.9 Data Evaluation Methodology Statistics and other related reports (Pitt, 2002 & Burton and Pitt, 2001). Statistical data analyses should include:

Exploratory Data Analysis
Exploratory data analysis should be used to observe overall data characteristics. These plots should include: 1) probability plots, 2) time series scatter plots, 3) grouped notched box and whisker plots to examine influent and effluent conditions.

Parametric and Nonparametric Tests for Paired Data Observations.
In the simplest case for monitoring the effectiveness of treatment alternatives, comparisons can be made of inlet and outlet conditions to determine the level of pollutant removal and the statistical significance of the concentration differences. Non-parametric tests for evaluating stormwater controls should use the basic sign test for paired data. The Mann-Whitney signed rank test has more power than the sign test, but it requires that the data distributions be symmetrical.

Regression Analyses
The use of a Regression of EMCs (influent versus effluent) should be used to determine the treatment performance, along with an analysis of variance, to determine the statistical relevance of the resulting overall regression equation and equation terms. The treatment performance can then be evaluated with the respect to the Minimum Standards.

J.7 Technical Evaluation Report (TER)

After testing has been completed, submit a TER to ~~RI~~DEM or CRMC. The TER supports the technologies ability to obtain a primary treatment level designation. If it is accepted for primary treatment, the technology and will be added to future Stormwater Management Manuals.

~~At a minimum, the~~ The TER must contain ~~the following information:~~

- ~~Performance~~performance data from a minimum of one test site ~~in the Pacific Northwest.~~
- ~~A~~, and a statement of the QAP objectives including the vendor's performance claims for specific land uses and applications ~~in Western and Eastern Washington~~.
- ~~All deliverables specified in the QAP.~~

Formatted: No bullets or numbering

~~A thorough~~
A prescriptive reporting approach is provided to insure completeness of reporting and to facilitate an effective and rapid review. The reporting guidelines are from the ASCE/EWRI Task Committee on Guidelines for Certification of Manufactured Stormwater BMPs (Roseen et al., 2009(b)).

The framework is listed below.

1. Summary: Executive Summary with rated performance rating, Study Summary, Data Collection Summary
2. Definitions
3. Site Conditions: longitude, latitude, land cover type, land use activities, site conditions, site elevations and slopes, location of sampling equipment, location of on-site stormwater collection system, and a description of ~~the technology,~~any upstream BMPs
4. Technology Description:
   a) The specific device used (model number, size, operating rate or volumetric flow rate)
   b) Functionality of treatment mechanisms including pretreatment and bypass requirements
   c) Physical description: engineering plans, site installation requirements
   d) Sizing methodology used for test: either manufacturers sizing methodology~~, flow diagrams and appropriate illustrations.~~ or agency specific sizing requirements (flows, volumes, runoff depth, etc.)
      - ~~All relevant performance test results, statistical analyses, factors other than performance, and operating and maintenance activities. A discussion of results obtained during each storm is required.~~
      - ~~Any available non-standard data (data not collected per the TAP, such as laboratory testing, or field performance testing with real storms not meeting protocol guidelines).~~
      - ~~Conclusions and recommendations including the technology's development level, recommended operating and maintenance (O&M) procedures and frequency, pretreatment requirements, and use limitations.~~
      - ~~Capital and projected annual costs, including O&M costs.~~
      - ~~An executive summary.~~
   e) ~~Additional testing recommendations~~Maintenance procedures
5. Test Methods and Procedures
   a) Particle size for influent, effluent, and residuals, mass based, concentration based
   b) Water quality parameters monitored
   c) Data Quality Objectives (DQO), QA methods, and measurement accuracy for the observations
   d) Measuring instruments, sampling frequency, and sampling program information
   e) Sampling Locations and Peak Concentration Timing
6. Testing and Sampling Event Characteristics:
   a) Storm date, depth, antecedent dry period, intensity, duration, season, type of runoff (precipitation, snowmelt, groundwater, etc.)
   b) Number of influent and effluent aliquots; storm volume, % storm treated influent, effluent, peak flow rate, calculation of peak reduction and lag coefficients, number of storms exceeding design criteria.
   c) Comparisons with Data Quality Objectives

Formatted: Outline numbered + Level: 2 + Numbering Style: a, b, c, … + Start at: 1 + Alignment: Left + Aligned at: 0.5" + Tab after: 0.75" + Indent at: 0.75"

d) System timeline (start and completion, sample events, rainfall events, maintenance occurrence)
e) Water level within system and rainfall for testing duration

7. Performance Results and Discussion:
   a) Event mean concentrations for influent and effluent with summary statistics (N, mean, median, coefficient of variation, standard deviation, one –tailed sign t-test)
   b) Detection limits and confidence intervals
   c) Performance metrics: removal efficiency for EMC and mass loads, efficiency ratio
   d) Statistical Evaluation: time series plot, box and whisker with confidence intervals, effluent probability method, linear regression.
   e) Solids characterization: influent, effluent, residuals particle size analysis
   f) Accumulated mass reductions
   g) Individual Storm Reports with event characteristics (6a and 6b), combination event hydrograph and hyetograph with sample times; system performance characteristics (7a-c), monitoring details
   h) Quality Assurance, rejection criteria and rejection summary.
   i) Maintenance findings: discussion on recommended maintenance schedules
8. Conclusions, Performance Claims, and Limitations
9. Appendices: Raw data and credentials

- Third Party Review. The testing and reporting, if needed.
- Anot performed by an independent professional third- party review.

The Reporting section of this protocol gives a more detailed description of the required elements of a TER. All elements of the reporting section are required in the TER.

J.7.1 Reporting

The sampling results, must be presented in the project report and include the following:

- Date, time, locations where samples were collected (include a site plan);
- Rainfall data (include antecedent dry period, total rainfall during sampling event,
- and rainfall duration);
- Comparison of rainfall data to rainfall criteria
- Comparison of collected aliquots to sampling criteria;
- Comparison of influent to effluent pollutant concentrations;
- Statistical data evaluation;
- Discussion of whether the QAP objectives were met;
- Discussion on deviations from any sampling procedures and reasons why any
- collected data or analyses were not included;
- Data quality assurance summary package (field and laboratory QA/QC results);
- Maintenance performed during the study period, including:
- Type of maintenance conducted and frequency;

- ~~Total amount of sediment and floatables removed and sediment depth~~
- ~~prior to each cleaning; and~~
- ~~Media replacement and/or cleaning, if applicable.~~
- ~~Discussion of results; and~~
- ~~Executive Summary.~~
- ~~Appendices~~reviewed. The independent review should include ~~all raw data such as any laboratory information, chain of custody forms, resumes, etc.~~

~~The third Party Review must conduct the following elements:~~

- ~~Complete the data validation report verifying that monitoring was conducted in accordance with the protocol and the QAP.~~
- ~~Prepare~~ a ~~data~~review summary~~, including a test results summary and conclusions compared with the supplier's performance claims.~~
- ~~Provide a recommendation of the appropriate technology use level.~~

10. ~~Provide additional testing recommendations, if needed~~ and observation of at least one monitoring event.

J.7.1 Confidential Information Submitted by the Applicant

Certain records or other information furnished in the TER may be deemed confidential. In order for such records or information to be considered confidential, the proponent of such technology must certify that the records or information relate to the processes of production unique to the manufacturer, or would adversely affect the competitive position of such manufacturer if released to the public or to a competitor. The proponent must request that such records or information be made available only for the confidential use.

To make a request for confidentiality, clearly mark only those pages that contain confidential material with the words "confidential." Include a letter of explanation as to why these pages are confidential. A notice will be sent granting or denying the confidentiality request.

J.7.2 Treatment Efficiency Calculation Methods

Calculate several efficiencies, as applicable. Consider lag time and steady-state conditions to calculate loads or concentrations of effluents that represent the same hydraulic mass as the influent. State the applicable performance standard on the table or graph.

For technologies sized for long residence times (hours versus minutes), the proponent must consider cumulative event mean performance of several storms, wet season or annual time periods. For short residence times (several minutes), event mean comparisons are recommended. For discrete short-time step residence times (few minutes), the proponent should consider lag times for influent/effluent comparisons.

Formatted: Outline numbered + Level: 1 + Numbering Style: 1, 2, 3, … + Start at: 1 + Alignment: Left + Aligned at: 0.25" + Tab after: 0.5" + Indent at: 0.5"

Formatted: Font: Arial, Not Bold

Formatted: Justified, Indent: Left: 0.5"

Formatted: Heading 3,3SWManual

Formatted: Indent: Left: 0"

Method #1: Individual storm reduction in pollutant concentration.

The reduction in pollutant concentration during each individual storm calculated as:

$$\frac{100[A-B]}{A}$$

Where: A = flow-weighted influent concentration B = flow-weighted effluent concentration

Method #2: Aggregate pollutant loading reduction.

Calculate the aggregate pollutant loading removal for all storms sampled as follows:

$$\frac{100[A-B]}{A}$$

Where: A = (Storm 1 influent concentration) * (Storm 1 volume) + (Storm 2 influent concentration) * (Storm 2 volume) +… (Storm N influent concentration) * (Storm N volume)

B = (Storm 1 Effluent concentration) * (Storm 1volume) + (Storm 2 effluent concentration) +…(Storm N effluent concentration) * (Storm N volume)

Concentrations are flow-weighted and flow = average storm flow or total storm volume (vendor's choice)

Method #3: Individual storm reduction in pollutant loading.

Calculate the individual storm reduction in pollutant loading as follows:

$$\frac{100[A-B]}{A}$$

Where: A = (Storm 1 influent concentration) * (Storm 1 volume)

B = (Storm 1 effluent concentration) * (Storm 1 volume)

J.8 References

ASTM. (2000). D 3977-97: Standard test methods for determining sediment concentration in water samples, American Society for Testing and Materials.

APHA, AWWA, WEF. 2005. "Standard Methods for the Examination of Water and Wastewater", 21th Edition. American Public Health Association, American Water Works Association, and Water Environment Federation, Washington, DC.

APWA. 1999. "Protocol for the Acceptance of Unapproved Stormwater Treatment Technologies for Use in the Puget Sound Watershed", prepared by the APWA Task

Committee for American Public Works Association, Washington Chapter, Stormwater Managers Committee, WA.

Burton, G.A. Jr. and R. Pitt. 2001. "Stormwater Effects Handbook: A Tool Box for Watershed Managers, Scientists, and Engineers". CRC Press, Inc., Boca Raton, FL.

~~Ecology. 2004. "Guidelines for Preparing Quality Assurance Project Plans for Environmental Studies", No. 01-03-003. Washington State Department of Ecology, Olympia, WA.~~

~~Ecology. 2005. "Stormwater Management Manual for Western Washington", Washington State~~GeoSyntec, Wright Water Engineers, USEPA, WERF, FHWA, and ASCE/EWRI. (2009). "Urban Stormwater BMP Performance Monitoring."

New Jersey Department of Environmental Protection (NJDEP), New Jersey Corporation for Advanced Technology (NJCAT).(2006). "New Jersey Tier II Stormwater Test Requirements - Amendments to Tarp Tier II Protocol."

New Jersey Department of ~~Ecology, Olympia, WA.~~

~~Ecology, 2004. "Stormwater Management Manual for Eastern Washington" , Washington State Department of Ecology, Olympia, WA~~

~~Ecology. 1997. "Analytical Methods for Petroleum Hydrocarbons". No. ECY 97-602. Washington State Department of Ecology, Toxics Cleanup Program and~~ Environmental ~~Laboratory, Olympia, WA.~~

~~EvTEC. 2000. EvTEC Evaluation Plan for Ultra-urban Stormwater Technologies". prepared for Washington State Department of Transportation by the Environmental Technology Evaluation Center (EvTEC), Washington, DC, and David Evans and Associates, Inc., Bellevue, WA~~Protection (NJDEP), (2009). "Protocol for Total Suspended Solids Removal Based on Field Testing Amendments to TARP Protocol." August 2009.

Pitt, R. E., Maestre, A., and Center for Watershed Protection. (2005). "The National Stormwater Quality Database (NSQD, version 1.1)." USEPA Office of Water, Washington, D.C.

Pitt, Robert, 2002. "Review of WA State Department of Ecology Protocol for Evaluating Stormwater Controls"

Roseen, R. M., Ballestero, T. P., Fowler, G. D., Guo, Q., and Houle, J. (2009(a)-Accepted). "Sediment Monitoring Bias by Auto-sampler in Comparison with Whole Volume Sampling for Parking Lot Runoff." Journal of Irrigation and Drainage Engineering.

Formatted: No widow/orphan control

Roseen, R. M., Carrasco, E., Cheng, Y., Hunt, B., Johnston, C., Mailloux, J., Stein, W., and Williams, T. (2009(b)) "Data Reporting Guidelines for Certification of Manufactured Stormwater BMPs: Part II." ASCE EWRI World Water Resources Congress, Kansas City, MO.

Strecker, E.W., M.M Quigley, B.R. Urbonas, J.E. Jones, and J.K. Clary. 2001. "Determining Urban Stormwater BMP Effectiveness". Journal of Water Resources Planning and Management, Volume 127. No. 3, pp. 144-149.

U.S. EPA, November 1997. "Monitoring Guidance for Determining the Effectiveness of Nonpoint Source Controls", EPA 841-B-96-004, U. S. Environmental Protection Agency, Nonpoint Source Control Branch, Washington, D.C.

U.S. EPA. 1995. "EPA Clean Water Act Section 403 Report to Congress, NPDES Permitting Program", EPA 842-R-94-001. U.S. Environmental Protection Agency, Washington, DC.

U.S. EPA. 1983a. "Methods for Chemical Analysis of Water and Wastes". EPA-600/4-79-020. Environmental Monitoring and Support Laboratory, Cincinnati, OH.

U.S. EPA. 1983-b. NURP Study, "Results of the Nationwide Urban Runoff Program", Volume 1. U.S. Environmental Protection Agency, Washington, D.C.

Washington State Department of Ecology (WADOE). (2008). "Technology Assessment Protocol- Ecology's (TAPE) by the State of Washington, Department of Ecology."

Webb, Paul A., August 15, 2000; Micromeritics internal document, www.micromeritics.com/ps_saturn_digisizer.html

Wentworth, C.K. 1922. A scale of grade and class terms for sediments. Journal of Geology. 30:377-392.

J.9 DATA EVALUATION METHODOLOGY STATISTICS

Adapted from TAPE, original source by Robert Pitt, P.E., Ph.D.

The following is a step-by-step procedure for conducting the statistical analysis:

1. Exploratory Data Analysis

In all cases, simple plots need to be presented to observe overall data characteristics. These plots should include: 1) probability plots, 2) time series scatter plots, 3) grouped notched box and whisker plots to examine influent and effluent conditions. These plots must be presented along with statistical analyses to quantify the patterns observed.

2. Parametric and Nonparametric Tests for Paired Data Observations

Nonparametric statistical tests may be a better choice than typical parametric tests. If the data conditions allow parametric tests (at least normally distributed data, for example), then the parametric tests usually have more statistical power. However, few environmental data meet parametric statistical test requirements. If a parametric test is improperly selected, then the calculated results can be very unreliable. **In most cases, nonparametric test alternatives are available and should be used unless the more restrictive test conditions can be met.**

Nonparametric tests also have certain requirements and these need to be considered. Generally, if the COV of a data set is less than about 0.4 (unlikely for most stormwater information, except for pH), it may be possible to use standard parametric tests. Alternately, it may be possible to transform the data (typically by using log transformations) so the data is normally distributed if parametric tests are desired. The following paragraphs summarize some of the more useful nonparametric tests for evaluating stormwater controls.

Nonparametric paired tests are probably the most useful statistical test procedure when conducting stormwater control evaluations. The sign test is the basic nonparametric test for paired data. It is simple to compute and has no requirements pertaining to data distributions. A few “not detected” observations can also be accommodated. Two sets of data are compared. The differences are used to assign a positive sign if the value in one data set is greater than the corresponding value in the other data set, or a negative sign is assigned if the one value is less than the corresponding value in the other data set. The number of positive signs are added and a statistical table is used to determine if the number of positive signs found is unusual for the number of data pairs examined.

The Mann-Whitney signed rank test has more power than the sign test, but it requires that the data distributions be symmetrical (but with no specific distribution type). Without logarithmic, or other appropriate, transformations, this requirement may be difficult to justify for water quality data. This test requires that the differences between the data pairs in the two data sets be calculated and ranked before checking with a

special statistical table. In the simplest case for monitoring the effectiveness of treatment alternatives, comparisons can be made of inlet and outlet conditions to determine the level of pollutant removal and the statistical significance of the concentration differences.

Friedman's test is an extension of the sign test for several related data groups. There are no data distribution requirements and the test can accommodate a moderate number of "non-detectable" values, but no missing values are allowed.

3. Regression Analyses

Regression analyses are very popular, but frequently misused. The use of the regression option in Microsoft Excel provides sufficient information for correct interpretation of the test results. Unfortunately, it is easy to place too much emphasis on the R^2 value when conducting a regression analysis, without first checking on the significance of the equation coefficients, and ensuring that the regression assumptions have been met. An analysis of variance (ANOVA) should always be conducted along with a regression analysis to determine the statistical relevance of the resulting overall regression equation and equation terms. These are always more useful than the traditional R^2 value when determining the acceptability of an equation. It is possible to have a statistically significant and useful model, with a seemingly low R^2 value.
In order to obtain the best and most useful regression analysis results, Burton and Pitt (2002) presented the following steps:

- Formulate the objectives of the curve-fitting exercise.
- Prepare preliminary examinations of the data, most significantly, prepare scatter plots, probability plots, and box and whisker plots
- Evaluate the data to ensure that regression is applicable and make suitable data transformations.
- Apply regression procedures to the selected alternative models.
- Evaluate the regression results by examining the coefficient of determination (R^2) and the results of the analysis of variance of the model (standard error analyses, and p values for individual equation parameters and overall model).
- Suggested: Conduct an analysis of the residuals (probability plot of residuals, plot of residuals against predicted model outcomes, and a plot of the residuals against the time sequence when the data were obtained). The probability plot should indicate a random distribution of the residuals, while the other plots should indicate an even (and hopefully narrow) band straight across the plot, centered along the 0 residual value. If these plots are incorrect, then the resulting model is likely faulty and should be reconsidered. Data transformations and additional model coefficients can be used to improve residual behavior).

4. Summary of Results

List all the results based on the exploratory and complete data analyses. Include the statistical determinations for alpha and beta errors, calculated p-values, COV,

regression equations and possibly other models and associated residual analyses.

5. Summary of the Statistics Methodology Used

As indicated above, the basic steps in the recommended statistical methodology include:

- Proper and balanced experimental design considering project objectives and expected characteristics
- Conducting initial experiments and initial data evaluations for quality control and general verification of methodology and experimental errors (do not make any major changes until sufficient data has been collected and evaluated to protect against premature experimental modifications).
- Conducting complete experiments
- Exploratory data analysis and other basic statistical tests (comparison tests, regression analyses, etc.)
- Additional statistical tests to investigate other data features (trends, complex interactions, etc.)
- Preparing project report, including recommendations.

~~J.9~~J.10 LABORATORY METHODS

Table J-~~1~~2 Recommended Analytical Procedures in Stormwater

Parameter	Analyte (or surrogate)	Method (in water)	Reporting ~~Limit[b,c]~~Limit[a,b]
Conventional Parameters	Total suspended solids	EPA Method 160.2 or SM 2540~~[d]~~D	1.0 mg/L
	Total dissolved solids	EPA Method 160.1 or SM 2540C	1.0 mg/L
	Settleable solids	EPA Method 160.5 or SM 2540F	1.0 mg/L
	Particle size distribution	Coulter Counter or Laser diffraction, or comparable method	
	~~Grain size~~	~~Ecology method sieve and pipette (PSEP 1997), or comparable method~~	
	pH	EPA Method 150.1 or SM 4500H$^+$	0.2 units
	~~Hardness as $CaCO_3$~~	~~EPA Method 200.1~~	~~1.0 mg/L~~
Nutrients	Total phosphorus	EPA Method 365.3 or SM 4500-P I	0.01 mg P/L
	Orthophosphate	EPA Method 365.3 or SM 4500-P G	0.01 mg P/L
	Total kjeldahl nitrogen	EPA Method 351.2	0.5 mg/L
	Nitrate-Nitrite	EPA Method 353.2 or SM 4500 -NO3$^-$ I	0.01 mg/L
~~***Metals***~~***Bacteria***	Total ~~recoverable zinc~~Coliform	EPA Method ~~200.8 (ICP/MS) or SM 3125 (ICP/MS)~~1604	~~5.0 µg/L~~
	~~Dissolved zinc~~	EPA Method ~~200.8 (ICP/MS) or SM 3125 (ICP/MS)~~1106.1	~~1.0 µg/L~~
	~~Total recoverable lead~~	EPA Method ~~200.8 (ICP/MS) or SM 3125 (ICP/MS)~~	
	~~Dissolved lead~~	~~EPA Method 200.8 (ICP/MS) or SM 3125 (ICP/MS)~~	
	~~Total recoverable copper~~	~~EPA Method 200.8 (ICP/MS) or SM 3125 (ICP/MS)~~	~~0.1 µg/L~~
	~~Dissolved copper~~	~~EPA Method 200.8 (ICP/MS) or SM 3125 (ICP/MS)~~	~~0.02 µg/L~~
	~~Total recoverable cadmium~~	~~EPA Method 200.8 (ICP/MS) or SM 3125 (ICP/MS)~~	~~0.1 µg/L~~
	~~Dissolved cadmium~~Enterococci	~~EPA Method 200.8 (ICP/MS) or SM 3125 (ICP/MS)~~1103.1	~~0.1 µg/L~~ ~~0.02 µg/L~~1 colony forming unit/per sample volume or dilution
	Escherichia coli		
~~***Petroleum Hydrocarbons***~~	~~NWTPH-Dx~~	~~Ecology, 1997, (Publication No. 97-602) or EPA SW-846 method 8015B~~	~~0.1-0.50 mg/L~~
	~~NWTPH-Gx~~	~~Ecology, 1997, (Publication No. 97-602)~~	~~0.12 mg/L~~
~~***Toxicity***~~	~~*Daphnia pulex*~~	~~EPA Method 600/4-90/027F (acute)~~	~~NA~~
	~~*Ceriodaphnia dubia*~~	~~EPA Method 600/4-90/027F (acute)~~	~~NA~~

~~a. Reporting Limits established as per Manchester Environmental Laboratory Users Manual (Ecology, 2005). Reporting limits may vary with each lab. Reporting limits for your lab should be the same or below those given in the table.~~

~~b. All results below reporting limits should also be reported and identified as such. These results may be used in the statistical evaluations.~~

Formatted Table

Formatted: Not Superscript/ Subscript

Formatted: Justified

Formatted: Normal,Normal-swmanual, Indent: Left: 0", First line: 0", Tab stops: Not at 0.48" + 0.76" + 0.87"

Formatted: Font: Italic

~~c. To ensure accurate results, Ecology recommends modifying these methods to analyze (filter) the entire field sample. Research results indicate that errors may be introduced by decanting a subsample, sousing a funnel splitter may help. The analyst may also consider analyzing several premixed subsamples from the same sample container to determine if significant variability occurred due to stratification. The QAP and TEER shall indicate whether the entire field sample or a subsample is used.~~
~~NA – Not applicable~~
~~SM – Standard Methods~~

~~Table J-2 Recommended Analytical Procedures in Sediment.~~

~~Parameter~~	~~Analyte (or surrogate)~~	~~Method (in Sediment)~~	~~Reporting Limit[b, c]~~
~~*Grain-size*~~	~~Total Solids~~ ~~TVS~~ ~~Grain-size~~	~~EPA Method 160.3 or SM 2540B~~ ~~EPA Method 160.4 or SM 2540E~~ ~~Ecology Method Sieve and Pipet (PSEP 1997) or ASTM F312-97~~	~~NA~~ ~~0.1%~~
~~*Metals*~~	~~Total Recoverable Zinc~~ ~~Total Recoverable Lead~~ ~~Total Recoverable Copper~~ ~~Total Recoverable Cadmium~~	~~EPA Method 200.8 (ICP/MS) or SM 3125 (ICP/MS) or EPA Method 200.7 (ICP)~~ ~~EPA Method 200.8 (ICP/MS) or SM 3125 (ICP/MS)~~ ~~EPA Method 200.8 (ICP/MS) or SM 3125 (ICP/MS)~~ ~~EPA Method 200.8 (ICP/MS) or SM 3125 (ICP/MS)~~	~~5.0 mg/Kg~~ ~~0.1 mg/Kg~~ ~~0.1 mg/Kg~~ ~~0.1 mg/Kg~~
~~*Petroleum Hydrocarbons*~~	~~NWTPH-Dx~~	~~Ecology, 1997 (Publication No. 97-602) or EPA SW-846 method 8015B~~	~~25.0-100.0 mg/Kg~~
~~*Toxicity*~~	~~*Daphnia pulex*~~ ~~*Ceriodaphnia dubia*~~	~~EPA Method 600/4-90/027F (acute)~~ ~~EPA Method 600/4-90/027F (acute)~~	~~NA~~ ~~NA~~

a. ~~b. Reporting Limits established as per Manchester Environmental Laboratory Users Manual (Ecology, 2005). Reporting limits may vary with each lab.~~
Reporting limits may vary with each lab. Reporting limits for your lab should be the same or below those given in the table.
b. ~~c.~~ All results below reporting limits sh~~a~~oul~~l~~d also be reported and identified as such. These results may be used in the statistical evaluations.
NA – Not applicable
SM – Standard Methods

Formatted: Numbered + Level: 1 + Numbering Style: a, b, c, … + Start at: 1 + Alignment: Left + Aligned at: 0" + Tab after: 0.25" + Indent at: 0.25"

Table J-3 Recommended Analytical Procedures in Sediment.

Parameter	Analyte (or surrogate)	Method (in Sediment)	Reporting Limit[a,b]
Grain-size	Total Solids TVS Grain-size	EPA Method 160.3 or SM 2540B EPA Method 160.4 or SM 2540E ASTM F312-97	NA 0.1%
Bacteria	Total Coliform Enterococci Escherichia coli	EPA Method 1604 EPA Method 1106.1 EPA Method 1103.1	1 colony forming unit/per sample volume or dilution

a. Reporting limits may vary with each lab. Reporting limits for your lab should be the same or below those given in the table.
b. All results below reporting limits should also be reported and identified as such. These results may be used in the statistical evaluations
NA – Not applicable
SM – Standard ~~Methods~~

~~J.10 PARTICLE SIZE DISTRIBUTION METHODOLOGIES~~

~~J.10.1 Wet Sieve Protocol and Mass Measurement For Total Solids and Accumulated Sediments~~

~~The intent of providing this protocol is to allow more analytical flexibility for vendors while setting reasonable expectations in terms of results. The purpose of requiring Particle Size Distribution (PSD) analysis in the TAP protocols is to collect consistent information on particle size that will aid in evaluating system performance. PSD measurements will provide a frame of reference for comparing variability in performance between storms and between different sites. These measurements are an important tool with which to assess performance since performance is likely to be affected by particle size. For example, it is likely that performance will drop with a substantial increase in fine soil particles. Conversely, it is anticipated that performance will be high with sandy sediments.~~

~~This protocol is intended for use with the laser diffraction Particle Size Distribution (PSD) analysis. Laser diffraction methods are effective for particles smaller than 250 µm. Therefore, particles greater than 250 µm must be removed with a sieve prior to PSD analysis. These large-sized particles will be analyzed separately to determine the total mass of particulates greater than 250 µm. This protocol functions as a supplement to the existing protocols provided by the manufacturers of laser diffraction instruments such that the larger-sized particles in the sample can also be measured.~~

~~The mass measurement for the larger-sized particles will also separate out particles between 499 to 250 µm in order to be consistent with the TAP definition of TSS (total suspended particles <500 µm).~~

~~J.10.2 Wet Sieving and Mass Measurement for Laser Diffraction Analysis~~

~~J.10.2.1 WET SIEVING~~

~~Sample Collection/Handling~~

~~Samples should be collected in HDPE or Teflon containers and held at 4° C during the collection process. If organic compounds are being collected, the sample containers should be glass or Teflon.~~

~~Preservation/Holding Time~~

~~Samples should be stored at 4°C and must be analyzed within 7 days (EPA, 1998). Samples may not be frozen or dried prior to analysis, as either process may change the particle size distribution.~~

~~Sonication~~

~~Do not sonicate samples prior to analysis to preserve particle integrity and representativeness. Laboratories using laser diffraction will have to be notified not to sonicate these samples at any time during the analysis. It is recommended that this request also be written on the chain-of-custody form that the analytical laboratory receives in order to assure that sonication is omitted.~~

~~J.10.2.2 LABORATORY PROCEDURES~~

~~Equipment~~

~~__ 2 Liters of stormwater sample water (total sample required for analysis (ASTM D 3977))~~
~~__ Drying oven (90 degrees C ±2 degrees)~~
~~__ Analytical balance (0.01 mg accuracy)~~
~~__ Desiccator (large enough diameter to accommodate sieve)~~
~~__ Standard sieves - larger than 2" diameter may be desirable~~
- ~~__ 500 µm (Tyler 32, US Standard 35)~~
- ~~__ 250 µm (Tyler 60, US Standard 60)~~

~~__ Beakers - plastic (HDPE)~~
~~__ Funnel (HDPE - Large enough diameter to accommodate sieve)~~
~~__ Wash bottle~~
~~__ Pre-measured reagent-grade water~~

~~Sample Processing~~

- ~~Dry 250 µm and 500 µm mesh sieves in a drying oven to a constant weight at 90 ± 2°C.~~
- ~~Cool the sieves to room temperature in a desiccator.~~
- ~~Weigh each sieve to the nearest 0.01 mg.~~
- ~~Record the initial weight of each dry sieve.~~
- ~~Measure the volume of sample water and record.~~
- ~~Pour the sample through a nested sieve stack (the 500 µm sieve should be on the top and the sieve stack should be stabilized in a funnel and the funnel should be resting above/inside a collection beaker).~~
- ~~Use some of the pre-measured reagent-grade water in wash bottle to thoroughly rinse all soil particles from sample container so that all soil particles are rinsed through the sieve.~~
- ~~Thoroughly rinse the soil particles in the sieve using a pre-measured volume of reagent-grade water.~~
- ~~The particles that pass through the sieve stack will be analyzed by laser diffraction Particle Size Distribution (PSD) analysis using the manufacturers recommended protocols (with the exception of no sonication).~~
- ~~Particles retained on the sieve (>250 µm) will not be analyzed with the laser diffraction PSD.~~
- ~~Dry each sieve (500 µm and 250 µm) with the material it retained in a drying oven to a constant weight at 90 ± 2°C. The drying temperature should be less than 100°C to prevent boiling and potential loss of sample (PSEP, 1986).~~
- ~~Cool the samples to room temperature in a desiccator.~~
- ~~Weigh the cooled sample with each sieve to the nearest 0.01 mg.~~
- ~~Subtract initial dry weight of each sieve from final dry weight of the sample and sieve together.~~
- ~~Record weight of particles/debris separately for each size fraction (≥ 500 µm and 499 - 250 µm).~~
- ~~Document the dominant types of particles/debris found in this each size fraction.~~

~~Laser Diffraction (PSD)~~

~~PSD results are reported in ml/L for each particle size range. Particle size gradations should match the Wentworth grade scale (Wentworth, 1922).~~

J.10.2.3 Mass Measurement

Equipment

- Glass filter - 0.45 µm (pore size) glass fiber filter disk (Standard Method D 3977) (larger diameter sized filter is preferable)
- Drying oven (90 degrees C ±2 degrees)
- Analytical balance (0.01 mg accuracy)
- Wash bottle
- Reagent grade water

Formatted: Font: 9 pt

Procedure

- Dry glass filter in drying oven at 90 ± 2°C to a constant weight.
- Cool the glass filter to room temperature in a desiccator.
- Weigh the 0.45 µm glass filter to the nearest 0.01mg.
- Record the initial weight of the glass filter.
- Slowly pour the laser diffraction sample water (after analysis) through the previously weighed 0.45 µm glass filter and discard the water.
- Use reagent grade water in wash bottle to rinse particles adhering to the analysis container onto glass filter
- Dry glass filter with particles in a drying oven at 90 ± 2°C to a constant weight.
- Cool the glass filter and dried particles to room temperature in a desiccator.
- Weigh the glass filter and particles to the nearest 0.01mg.
- Subtract the initial glass filter weight from the final glass filter and particle sample weight.
- Record the final sample weight for particles <250 µm in size.

Quality Assurance

Dried samples should be cooled in a desiccator and held there until they are weighed. If a desiccator is not used, the particles will accumulate ambient moisture and the sample weight will be overestimated. A color-indicating desiccant is recommended so that spent desiccant can be detected easily. Also, the seal on the desiccator should be checked periodically, and, if necessary, the ground glass rims should be greased or the "O" rings should be replaced.

Handle sieves with clean gloves to avoid adding oils or other products that could increase the weight. The weighing room should not have fluctuating temperatures or changing humidity. Any conditions that could affect results such as doors opening and closing should be minimized as much as possible.

After the initial weight of the sieve is measured, the sieve should be kept covered and dust free. Duplicate samples should be analyzed on 10% of the samples for both wet sieving and mass measurements.

Reporting

Visual observations should be made on all wet sieved fractions and recorded. For example if the very coarse sand fraction (2,000-1,000 µm) is composed primarily of beauty bark, or cigarette butts, or other organic debris this should be noted. An option might also be for a Professional Geologist to record the geological composition of the sediment as well.

J.10.3 REFERENCES

ASTM. 1997. Standard test methods for determining sediment concentration in water samples. Method D 3977. American Society for Testing and Materials, Philadelphia, PA.

PSEP. 1986. Recommended Protocols for measuring conventional sediment variables in Puget Sound. Prepared by Tetra Tech, Inc. for U.S. Environmental Protection Agency and Puget Sound Water Quality Authority. Tetra Tech Inc., Bellevue, WA.

U. S. EPA. 1998. Analysis of total suspended solids by EPA Method 160.2. Region 9, Revision 1. SOP 462. 12 pp

Wentworth, C.K. 1922. A scale of grade and class terms for clastic sediments. *Journal of Geology*. 30:377-392

<Page left blank intentionally>

APPENDIX K: HYDROLOGIC & HYDRAULIC MODELING GUIDANCE

The following checklist is provided to assist designers in complying with Minimum Standard #~~ ~~4 Conveyance and Natural Channel Protection and Minimum Standard #5 Overbank Flood Protection in this manual. This checklist was prepared by Nicholas A. Pisani, P.E. of DEM to help guide designers with the drainage design and submittal requirements under the DEM Freshwater Wetland Regulations. This design guidance should similarly be used when preparing applications to the CRMC under the *Rules and Regulations Governing the Protection of Freshwater Wetlands in the Vicinity of the Coast* and for applications under the Coastal Resources Management Program (CRMP). In some cases, the CRMC may waive some of these guidance elements for projects discharging stormwater directly to coastal waters under CRMP Section 300.6.

The CRMC and other ~~s~~State or local permitting entities may also have additional or somewhat different requirements in their regulations or regulatory guidance. Accordingly, the designer may wish to consult with the appropriate permitting agency before proceeding with the project design.

- A Hydrologic Analysis should include four components:
  - A Drainage Narrative
  - Pre- and Post-~~Development Subwatershed~~development Drainage Area Maps
  - A Drainage Diagram (node diagram)
  - Drainage Analysis Input and Output data

Note: For ~~Subwatershed~~Drainage Area Maps, adequately label all ~~subwatershed~~drainage areas, detention storage and/or infiltration practices, and other BMPs. Labeling needs to be consistent with submitted drainage analysis.

DRAINAGE NARRATIVE

- The drainage narrative should include:
  - Provide a detailed description of existing condition hydrology;
  - Describe any existing drainage systems, and indicate their design capacities and their existing conditions;
  - The design storms for all proposed drainage systems/~~-~~drainage facilities;
  - The design capacity of all proposed drainage systems;
  - Include a description of each of the design/analysis points. This description needs to address the downstream receiving destination of each design/analysis point;
  - Describe any upgradient areas (including off-site areas) that contribute drainage to any of the ~~subwatersheds~~drainage areas included in the analysis;
  - Describe the site, including cover types, slopes, critical features, and/or

constraints such as wetlands, steep slopes, utility corridors/easements, and pertinent site history;

- Indicate the analysis methods used and software packages used, including version references;
- Indicate the goals of the analysis, including all local, state, and federal parameters and goals addressed in the submittal;
- Describe the various water quality mitigation practices and water quantity mitigation (including mitigation of peak runoff discharge rates, and if necessary, total runoff volume) practices employed (see Appendix A);
- Summarize the results of the analysis, including summary of key input data (rainfall depths for each storm event analyzed, subwatershed areas, weighted curve numbers (CNs), and times of concentration (t_c)) and output data (peak runoff discharge rate, time of peak, and total runoff volume). In this comparison, also address the overall changes in drainage area to each design/analysis point; and
- Include a discussion of any and all diversion structures that may be included in the design.

Formatted: Subscript

~~SUBWATERSHED~~DRAINAGE AREA MAPS

The following list serves as guidance for the preparation of existing (pre-~~project~~development) condition and proposed (post-~~project~~development) condition ~~subwatershed~~drainage area maps.

This guidance is intended to allow design engineers to prepare the ~~subwatershed~~drainage area maps which accompany submitted drainage analyses in a manner which allows for clear and expeditious review. ~~Subwatershed~~Drainage area maps which include the items listed below will typically allow the reviewing staff to clearly observe the correlation between the site conditions (existing and proposed) that affect the production of runoff and the submitted analyses.

~~Subwatershed~~Drainage area maps prepared in accordance with the following guidelines need to accompany all engineering drainage analysis calculations for the determination of existing (pre-~~project~~development) condition and proposed (post-~~project~~development) condition peak runoff discharge rates.

- Separate ~~subwatershed~~drainage area maps should be submitted for ~~pre-development~~existing (pre-project) and proposed (post-~~project~~development) conditions;
- Provide one set of ~~subwatershed~~drainage area maps to accompany each drainage analysis copy;
- If possible, try to limit the size of sheets to 24” x 36”. However, if it is necessary to use a larger sheet due to the size of the watershed, this is acceptable. Because the ~~subwatershed~~drainage area maps are considered to be a component of the drainage analysis, and not part of the submitted plans, the 24” x 36” size limitation

may be deviated from where appropriate;

- ~~Subwatershed~~Drainage area boundaries or limits need to be complete. If ~~subwatersheds~~drainage areas include upgradient areas which extend beyond the subject property, provide adequate ~~subwatershed~~drainage area mapping of off-site areas so as to depict the entirety of each ~~subwatershed;~~drainage area;
- Provide a suitable scale for existing and proposed condition ~~subwatershed~~drainage area maps, such as 1"=40', 1"=50', or 1"=100'. Scales which provide greater detail are acceptable. If the ~~subwatershed~~drainage area(s) is/are very large, the on-site map scale must be no smaller than 1"=100'. Smaller scale mapping (such as 1"-~~2000'~~2,000' USGS topography map scale or the 1"=~~1320'~~1,320' scale of the Soil Survey of Rhode Island maps) may be done for off-site areas;
- The existing and proposed condition ~~subwatershed~~drainage area maps need to compare the same overall area. Common analysis points are also needed for comparison of pre-~~project~~development and post-~~project~~development runoff discharge. Be sure to account for any post-~~project subwatershed~~development drainage areas which do not drain to a stormwater facility;
- Provide sufficient off-site detail, either on the ~~subwatershed~~drainage area maps or ~~no~~on accompanying maps of appropriate scale (such ~~a~~as USGS quadrangle maps), to provide the downstream destination of watercourses which leave the site. (For example, two streams leaving the site may converge to discharge to the same downstream river, or may diverge to flow to separate watersheds;
- Provide existing (pre-~~project~~development) condition and proposed (post-~~project~~development) condition topography. Do not illustrate proposed condition topography on the existing condition ~~subwatershed~~drainage area map. Provide at least a 2' contour interval for the on-site topography. Topography for upgradient, off-site areas may utilize a 10'~~-~~contour interval (~~i.~~e.g., USGS topography);
- Indicate the property lines of the subject site and the proposed project limits on all submitted ~~subwatershed~~drainage area maps;
- Indicate the limits of wetland areas on-site, and depict approximate limits of off-site wetlands in the project vicinity (~~for example,~~e.g., Soil Survey of Rhode Island maps and/or USGS quadrangle map information may be used for off-site areas);
- Indicate the designation of watercourses and water bodies in terms of applicable Freshwater Wetlands Program terminology (~~i.~~e.g., rivers, streams, ponds, areas subject to storm flowage (ASSFs). Include the names of water bodies, where applicable;
- The ~~subwatershed~~drainage area maps need to map and indicate the various cover types in each ~~subwatershed~~drainage area (see Urban Hydrology For Small Watersheds, 1986 (TR-55 Manual), Table 2.2~~)~~), which are used to calculate the weighted curve number for each ~~subwatershed.~~drainage area. Map and label the cover types (example: woods, brush, grass, impervious, etc,) along with pertinent hydrologic soil groups (A, B, C, or D), and applicable hydrologic conditions (i.e., good~~, fair, poor~~) within each subarea. Number each existing and proposed condition subarea. Please ensure that the labeling of the subareas is consistent with the submitted analysis;
- Indicate the ~~time of concentration~~t_c flow path of each ~~subwatershed~~drainage area (TR-55 Manual, Chapter 3); and

- Indicate all existing and proposed stormwater conveyance feature (swales, pipes, catch basins, drainage inlets, ditches, culverts, etc.) and stormwater management facilities and/or practices used for detention and/or water quality management purposes. Clearly indicate which areas these items serve. Label all proposed stormwater management facilities and/or BMPs. Please ensure that the labeling of the proposed stormwater facilities~~ / ~~/BMPs is consistent with the submitted analysis.
- Provide a north arrow on each drainage map.
- For all proposed buildings, indicate the areas which drain to each respective drainage area. Also, indicate roof leaders and the drainage areas to which these roof leaders are directed.
- Indicate the Qualifying Pervious Areas (QPAs) on the drainage area maps, as applicable.

DRAINAGE DIAGRAM

Formatted: Keep with next, Keep lines together

A drainage diagram (often referred to as a node diagram) is needed to allow the reviewer to observe the various flow paths of the analyses. This diagram is intended to indicate the ~~subwatersheds~~drainage areas that produce the runoff being analyzed, the various reaches that convey this runoff, detention and/or infiltration facilities that detain and/or infiltrate runoff, and discharge locations that represent the various design/analysis points that are studied. Certain nodes may represent drainage structures with more than one discharge destination. These nodes are used to represent such structures as diversion manholes and similar facilities.

Drainage diagrams are used by the reviewer to observe and evaluate the model set-up of the submitted hydrologic analysis. These diagrams are used to relate the various inputs and outputs found in the submittal to the ~~subwatershed~~drainage area maps and to the plans.

- The drainage diagram should~~ include~~:
  - Provide pre-development and post-development drainage diagram;
  - Indicate ~~subwatershed~~drainage areas, reaches, ponds (including detention basins and/or infiltration facilities), pertinent drainage structures (such as diversion structures), and design/analysis points. Connect these nodes with arrows indicating flow direction; and
  - Label all features on the drainage diagram so as to be consistent with the submitted analysis. Labeling also needs to be consistent with the information depicted on the submitted ~~subwatershed~~drainage area maps.

DRAINAGE ANALYSIS INPUT AND OUTPUT DATA

- The drainage analysis inputs should~~ include~~:
  - Indicate the method of hydrologic analysis. A TR-55 or TR-20 based

methodology is required for hydrologic analysis. If hydrologic software is used, indicate the name and version of the software package used;
- Indicate the storm events analysis and the rainfall depths used;
- Provide the input data used in the determination of weighted curve numbers. Include cover types, hydrologic soil group information, and hydrologic condition. Unless otherwise required, use an antecedent moisture condition II (AMC II), which represents normal antecedent moisture conditions;
- Provide inputs for the ~~time of concentration (~~t_c~~)~~ analysis;
- Provide all equations and methodologies used in the hydrologic analysis;
- Provide the elevation-area-storage inputs used in storage routing calculations. Provide at least two~~-~~-foot intervals. Be sure that the bottom elevation and top elevation of the storage facility ~~is~~are included;
- Indicate the initial storage condition of detention storage facilities;
- Indicate the presence or consideration of any potential tailwater conditions.
- Provide input data describing all outflow devices;
- Provide the pertinent outflow equations used in the analysis of all outflow devices. Be sure to include all pertinent weir and/or orifice coefficients;
- Indicate the routing method used in the analysis. The storage – indication method is required to be used for detention storage routing;
- Provide input data regarding the calculation of all infiltration rates used in the analysis. Include pertinent soils testing to substantiate the infiltration rates used. Provide any calculations to convert rates to the input values used in the analysis;
- Indicate the time span used in the analysis. Typically, a time span that covers hour 0 to hour 24 needs to be employed in the analysis; and
- Indicate the time increment used in the analysis.

- Drainage analysis output information should include:
  - For each ~~subwatershed~~drainage area, provide the peak runoff discharge rate, the time to peak, and the total runoff volume produced in the pertinent Type III 24-hour storm event;
  - Provide the peak outflow rates (including ~~in~~exfiltration rates, if applicable) for all detention and/or infiltration facilities. For these facilities, also provide the peak water levels and peak storage in the pertinent storm events analyzed;
  - For infiltration systems, indicate the peak infiltration rates and the totals of volume infiltrated for each infiltration system; and
  - Many software packages provide the option of summary sheets that contain information on peak runoff discharge rates, times to peak, total runoff volume, peak volume stored in detention, and peak elevation within detention facilities. If possible, provide summary data.

- The analysis needs to provide a comparison of the peak runoff discharge rate, time to peak, and total runoff volume to each design/analysis point.
- Provide a hydraulic analysis of all proposed drainage conveyance systems. Indicate the design capacity of all components of the systems (e.g., catch basin, pipes, channels, etc.). Indicate whether such systems will successfully carry larger storm

Formatted: Subscript

events in surcharge conditions or whether there will be ponding and/or overflow in certain locations.

- Plans:
  - Provide profiles of all drainage conveyance systems. Include pipe and channel slopes, pipe diameters, channel cross-sections, soil profiles in swales, bedding details, subdrain details, and types of construction materials;
  - Indicate the discharge location of all building roof leaders. If a building will discharge to more than one discharge location, these locations need to be indicated, along with the pertinent area of contributing rooftop;
  - Provide cross-sections and/or profiles of all detention and infiltration facilities. Include pertinent structural details of outlet structures, as such details may relate to the selection of applicable discharge equations (e.g., weir, orifice equations) and/or discharge coefficients;
  - Provide detailed cross-section drawings of all outlet structures. Include dimensions and materials of all flow control devices, including weirs and orifices;
  - Include pertinent details of any and all proposed diversion structures;
  - Include pertinent weir and/or orifice dimensions and elevations; and
  - Include details of all proposed trash racks~~ / ~~/debris screens.

THE FOLLOWING CHECKLIST MAY BE USED PRIOR TO SUBMITTAL (Based on staff experience, errors or omissions related to these areas resulted in applications being deemed incomplete)

- ☐ Ensure that a design analysis point is utilized for each separate receiving wetland area. If in doubt on where design~~-~~/analysis points ~~to employ~~should be, seek input from review staff;
- ☐ Ensure that a pre-development vs. post-development analysis is provided for each design/analysis point;
- ☐ Ensure that adequate narrative is included for each design/analysis point;
- ☐ Be sure to include summary sheets from the submitted hydrologic analysis, if these are available;
- ☐ Ensure that plans adequately correlate to ~~subwatershed~~drainage area maps;
- ☐ Ensure that the ~~subwatershed~~drainage area maps correlate to the submitted hydrologic analysis;
- ☐ Ensure that drainage diagrams properly correlate to the hydrologic analysis;
- ☐ Ensure consistency of detention storage values with plan details;
- ☐ Ensure that ~~subwatershed~~drainage area maps are consistent with the drainage diagrams that form the basis of the hydrologic analysis. Be sure that labeling of the ~~subwatershed~~drainage area maps is consistent with that of the hydrologic analysis;
- ☐ Ensure that the plans properly correlate to the submitted analysis. Be especially careful of outlet structures;
- ☐ Ensure that sufficient topographic detail is provided so as to adequately substantiate the delineation of ~~subwatershed~~drainage area boundaries. Please ensure that this

Formatted: Bulleted + Level: 1 + Aligned at: 0" + Tab after: 0.25" + Indent at: 0.25"

is the case for off-site areas as well as the subject property. (For off-site areas, it is not necessary to provide a level of topographic detail greater than found on a USGS quadrangle map. However, in instances where an off-site area is developed and includes a stormwater drainage system, the discharge point of the drainage system and its contributing area need to be investigated and included;

- Ensure that subwatershed drainage area areas to existing isolated upland or wetland depressions are mapped. (Failure to do so will allow the existing condition analysis to present unrealistically high peak runoff discharge rates to a downgradient design/analysis point);
- Ensure that ground cover types are properly delineated, labeled, and described;
- Ensure that the hydrologic condition is pervious land covers are properly evaluated. Note that a woodland with a forest floor consisting of leaf litter is represented by a "good" hydrologic condition. Use of the "fair" or "poor" hydrologic condition is generally prohibited unless substantiated by adequate documentation including, but not limited to, photographs;;
- Ensure that the proper soil type and soil hydrologic group is mapped on the existing condition subwatershed drainage area map. Please note that field checking is encouraged before relying on the mapped soil type boundaries in the Soil Survey of Rhode Island. Often there will be some map error that may show upland soils in a wetland or vice versa. While the soils types involved are typically accurate, the exact boundaries should be weighed against on-site evaluations, available wetland edge determinations, and design judgment;
- Ensure that there is consistency between the plans and the analysis with respect to outlet devices;
- Ensure that the proper equations, coefficients, and dimensions are utilized for the evaluation of weirs and orifices. Check to ensure that compound weirs do not double-count flow. Check to ensure that flow is not allowed within the interstices of riprap in emergency overflow spillways, unless it is quantified in the analysis. (Typically, an internal barrier, such as a curb, may be placed within the riprap so as to block flow within riprap interstices);
- Ensure that the analysis properly evaluates hydrologic impacts at each design/analysis point. Please note that although an analysis may show that there will be a decrease in peak runoff discharge rates from a particular site, this may not guarantee that there will not be an increase at each design/analysis point. The submittal needs to address the level of impacts to each receiving water body;
- Take care in the selection of time of concentration t_c flow paths. The t_c flow paths need to be reasonably accurate in their depiction of the hydraulically longest flow path of each subwatershed; drainage area;
- Do not use sheet flow lengths in excess of 150 feet for pre-development and 100 feet for post-development in the analysis;
- Be careful in the calculation of slopes in the t_c analysis. Also, be cautious in the selection of n-values. Please note that n-values in the TR-55 Manual that pertain to sheet flow may not be used in calculating channel flow velocities. Use n-values found in Chow (Chow, V. T., 1959. Open Channel Hydraulics) instead;
- Be sure to provide adequate soil test pit data to substantiate the determination of seasonal high groundwater table, bedrock, and design infiltration rate;

Formatted: Subscript

Formatted: Subscript

- Be sure to depict the elevation of the seasonal high groundwater table on all cross-section drawings of proposed BMPs;
- Be sure to address whether the delivery system for drainage to a proposed BMP will be capable of accommodating the peak discharge rate that the BMP is intended to accommodate. For example, if a proposed stormwater detention basin has been shown to reduce peak runoff discharges in a 100-year storm to pre-development rates, the designer needs to ensure that the proposed conveyance system that will deliver runoff to the proposed detention basin will be able to accommodate the 100-year runoff event without bypass of unmitigated runoff to the design/analysis point. Therefore, the proposed drainage system would either need to be designed for the 100-year event, ~~would or~~ would need to have capacity in a surcharge condition to carry the 100-year flow without unmitigated bypass to the design point, or there would need to be enough surface storage in the area being drained so as to prevent unmitigated discharge to the design/analysis point; and
- Be cautious regarding the initial conditions on detention ponds. Wet ponds need to be assumed to be full at the start of the storm event being modeled.

The following is a list of publications in the fields of hydrology and/or hydraulics that may be helpful in the preparation of stormwater management projects:

Formatted: Keep with next, Keep lines together

Formatted: Font: 11 pt

American Society of Civil Engineers, 1992. Design and Construction of Urban Stormwater Management Systems. "ASCE Manuals and Reports of Engineering Practice No. 77, WEF Manual of Practice FD-20." New York, NY.

American Society of Civil Engineers and the Water Pollution Control Federation, 1986. Design and Construction of Sanitary and Storm Sewers. ASCE Manuals and Reports of Engineering Practice No. 37, WPCF Manual of Practice No. 9, American Society of Civil Engineers, New York, New York, and Water Pollution Control Federation, Washington, DC.

Brater, E.F. and H.W. King, 1976. Handbook of Hydraulics. 6th ed., McGraw Hill Book Company, New York, NY.

Brown, S. A., S. M. Stein, and J.C. Warner, 2001. Urban Drainage Design Manual. Hydraulic Engineering Circular 22, Second Edition, Federal Highway Administration, FHWA-NHI-01-021, Washington, DC.

Chow, V. T., 1959. Open Channel Hydraulics. McGraw-Hill, New York, 1959.

Chow, V. T., D. R. Maidment, and L.W. Mays, 1988. Applied Hydrology. McGraw-Hill, New York, NY.

Dunne, T. and L. B. Leopold, 1978. Water in Environmental Planning. W.H. Freeman and Company, San Francisco.

Johnson, F. L. and F. M. Chang, 1984. Drainage of Highway Pavements. Hydraulic Engineering Circular No. 12, Federal Highway Administration, FHWA-TS-84-202, Washington, DC.

Linsley, R.K. and J.B. Franzini, 1979. Water-Resources Engineering, 3rd ed., McGraw-Hill Book Company. New York, NY.

Maidment, D. R. ed. 1993. Handbook of Hydrology. McGraw-Hill Book Company. New York, NY.

McCuen, R. H., P.A. Johnson, and R.M. Ragan, 1996. Highway Hydrology. Hydraulic Design Series No. 2, Federal Highway Administration, FHWA-SA-96-067, McLean, VA.

Normann, J.M., R. J. Houghtalen, and W.J. Johnston, 1985. Hydraulic Design of Highway Culverts. Hydraulic Design Series No. 5, Federal Highway Administration, FHWA-IP-85-15, McLean, VA.

Novotny, V. and G. Chesters, 1981. Handbook of Nonpoint Pollution, Sources and Management. Van Nostrand Reinhold Company, New York, NY.

Ponce, V. M., 1989. Engineering Hydrology: Principles and Practices. Prentice- Hall Inc., Englewood Cliffs, NJ.

Richardson, E.V., D. B. Simons, and P. Y. Julien, 1990. Highways in the River Environment. FHWA-HI-90-016, Fort Collins, CO.

Schall, J. D. and E.V. Richardson, 1997. Introduction to Highway Hydraulics. Hydraulic Design Series Number 4. Federal Highway Administration, FHWA HI 97-028, Washington, DC.

T.R. Shueler, 1987. Controlling Urban Runoff: A Practical Manual for Planning and Designing Urban BMPs. Metropolitan Council of Governments, Washington, DC.

Soil Conservation Service, 1982. TR-20. Project Formulation-Hydrology. Technical Release 20, Lanham, Maryland.

Soil Conservation Service, 1986. Urban Hydrology for Small Watersheds. Technical Release No. 55, U.S. Department of Agriculture.

Soil Conservation Service, 1990. Engineering Field Manual. U.S. Department of Agriculture, Washington, DC.

Soil Conservation Service, 1972. "Soil Conservation Service National Engineering Handbook." Section 4, Hydrology, U.S. Department of Agriculture, Soil Conservation Service, Washington, DC.

Stahre, P. and B. Urbonas, 1990. Stormwater Detention for Drainage Water Quality, and CSO Management. Prentice Hall, Englewood Cliffs, NJ.

U.S. Weather Bureau. 1961. "Rainfall Frequency Atlas of the United States", Technical Paper No. 40, U.S. Department of Commerce, Washington, DC.

Viessman, W., Jr., G. L. Lewis, and J. W. Knapp, Introduction To Hydrology, 3rd ed., Harper Collins New York, NY.

Page B-22: [1] Formatted	Michelle West	4/29/2010 3:16:00 PM

Font: 11 pt

Page B-22: [2] Formatted	Michelle West	4/29/2010 3:16:00 PM

Font: 11 pt

Page B-22: [3] Formatted	Michelle West	4/29/2010 3:16:00 PM

Font: 11 pt

Page B-22: [4] Change	Michelle West	4/29/2010 3:16:00 PM

Formatted Table

Page B-22: [5] Formatted	Michelle West	4/29/2010 3:16:00 PM

Font: 11 pt

Page B-22: [6] Formatted	Michelle West	4/29/2010 3:16:00 PM

Font: 11 pt

Page B-22: [7] Formatted	Michelle West	4/29/2010 3:16:00 PM

Font: 11 pt

Page B-22: [8] Formatted	Michelle West	4/29/2010 3:16:00 PM

Font: 11 pt

Page B-22: [9] Formatted	Michelle West	4/29/2010 3:16:00 PM

Font: 11 pt

Page B-22: [10] Formatted	Michelle West	4/29/2010 3:16:00 PM

Font: 11 pt

Page B-22: [11] Formatted	Michelle West	4/29/2010 3:16:00 PM

Font: 11 pt

Page B-22: [12] Formatted	Michelle West	4/29/2010 3:16:00 PM

Font: 11 pt

Page B-22: [13] Formatted	Michelle West	4/29/2010 3:16:00 PM

Font: 11 pt

Page B-22: [14] Formatted	Michelle West	4/29/2010 3:16:00 PM

Font: 11 pt

Page B-22: [15] Formatted	Michelle West	4/29/2010 3:16:00 PM

Font: 11 pt

Page B-22: [16] Formatted	Michelle West	4/29/2010 3:16:00 PM

Font: 11 pt

Page B-22: [17] Formatted	Michelle West	4/29/2010 3:16:00 PM

Font: 11 pt

Page B-22: [18] Formatted	Michelle West	4/29/2010 3:16:00 PM

Font: 11 pt

Page B-22: [19] Formatted	Michelle West	4/29/2010 3:16:00 PM

Font: 11 pt

Font: 11 pt

Page B-22: [21] Formatted	Michelle West	4/29/2010 3:16:00 PM

Font: 11 pt

Page B-22: [22] Formatted	Michelle West	4/29/2010 3:16:00 PM

Font: 11 pt

Page B-22: [23] Formatted	Michelle West	4/29/2010 3:16:00 PM

Font: 11 pt

Page B-22: [24] Formatted	Michelle West	4/29/2010 3:16:00 PM

Font: 11 pt

Page B-22: [25] Formatted	Michelle West	4/29/2010 3:16:00 PM

Font: 11 pt

Page B-22: [26] Formatted	Michelle West	4/29/2010 3:16:00 PM

Font: 11 pt

Page B-22: [27] Formatted	Michelle West	4/29/2010 3:16:00 PM

Font: 11 pt

Page B-22: [28] Formatted	Michelle West	4/29/2010 3:16:00 PM

Font: 11 pt

Page B-22: [29] Formatted	Michelle West	4/29/2010 3:16:00 PM

Font: 11 pt

Page B-22: [30] Formatted	Michelle West	4/29/2010 3:16:00 PM

Font: 11 pt

Page B-22: [31] Formatted	Michelle West	4/29/2010 3:16:00 PM

Font: 11 pt

Page B-22: [32] Formatted	Michelle West	4/29/2010 3:16:00 PM

Font: 11 pt

Page B-22: [33] Formatted	Michelle West	4/29/2010 3:16:00 PM

Font: 11 pt

Page B-22: [34] Formatted	Michelle West	4/29/2010 3:16:00 PM

Font: 11 pt

Page B-22: [35] Formatted	Michelle West	4/29/2010 3:16:00 PM

Font: 11 pt

Page B-22: [36] Formatted	Michelle West	4/29/2010 3:16:00 PM

Font: 11 pt

Page B-22: [37] Formatted	Michelle West	4/29/2010 3:16:00 PM

Font: 11 pt

Page B-22: [38] Formatted	Michelle West	4/29/2010 3:16:00 PM

Font: 11 pt

Page B-22: [39] Formatted	Michelle West	4/29/2010 3:16:00 PM

Page B-22: [40] Formatted	Michelle West	4/29/2010 3:16:00 PM

Font: 11 pt

Page B-22: [41] Change	Michelle West	4/29/2010 3:16:00 PM

Formatted Table

Page B-22: [42] Formatted	Michelle West	4/29/2010 3:16:00 PM

Font: 11 pt

Page B-22: [43] Formatted	Michelle West	4/29/2010 3:16:00 PM

Font: 11 pt

Page B-22: [44] Formatted	Michelle West	4/29/2010 3:16:00 PM

Font: 11 pt

Page B-22: [45] Formatted	Michelle West	4/29/2010 3:16:00 PM

Font: 11 pt

Page B-22: [46] Formatted	Michelle West	4/29/2010 3:16:00 PM

Font: 11 pt